Department of Defense
Legacy Resource Management Program

PROJECT 03-176

Antiterrorism Measures for Historic Properties

Julie L. Webster, Patrick E. Reicher, and Gordon L. Cohen,
ERDC-CERL

FY06

Approved for public release; distribution is unlimited.

ERDC/CERL TR-06-23

Construction Engineering Research Laboratory

US Army Corps of Engineers®
Engineer Research and Development Center

Legacy Resource Management Program

Antiterrorism Measures for Historic Properties

Julie L. Webster, Patrick E. Reicher, and Gordon L. Cohen

September 2006

Approved for public release; distribution is unlimited.

Legacy Resource Management Program

ERDC/LAB TR-06-23
September 2006

Antiterrorism Measures for Historic Properties

Julie L. Webster, Patrick E. Reicher, and Gordon L. Cohen

Construction Engineering Research Laboratory
U.S. Army Engineer Research and Development Center
2902 Newmark Drive
Champaign, IL 61822

Final report

Approved for public release; distribution is unlimited

Prepared for Office of the Deputy Under Secretary of Defense for Environmental Security

Under Reimbursable Order 97/0100/701/A/W31RY031164703/PO

Abstract: Unified Facilities Criteria (UFC) 4-010-01 establishes the minimum antiterrorism (AT) standards for Department of Defense buildings. Those standards apply not only to new buildings, but also to existing buildings, including properties defined as historic under the National Historic Preservation Act (NHPA). Because achieving the specified level of protection may involve significant modifications of an existing building, compliance with UFC 4-010-01 may create its own set of preservation-related compliance challenges. The objectives of this study were to (1) identify common circumstances in which UFC 4-010-01 undertakings will conflict with the requirements of the NHPA and (2) develop specific guidelines that will help installation command, AT, cultural resources, and facilities personnel to rapidly resolve those conflicts in a way that satisfies both sets of requirements.

DISCLAIMER: The contents of this report are not to be used for advertising, publication, or promotional purposes. Citation of trade names does not constitute an official endorsement or approval of the use of such commercial products. All product names and trademarks cited are the property of their respective owners. The findings of this report are not to be construed as an official Department of the Army position unless so designated by other authorized documents.

DESTROY THIS REPORT WHEN NO LONGER NEEDED. DO NOT RETURN IT TO THE ORIGINATOR.

Contents

Figures and Tables vi

Preface ix

Unit Conversion Factors xi

Introduction 1

Background 1
Objectives 2
Approach 3
Scope 3
Terrorist goals and historic military properties 4
Overview of UFC 4-010-01 for cultural resources personnel 5
Applicability and exemptions 5
Baseline threats 7
Protective design goals 7
UFC compliance triggers 7
Historic preservation compliance protection in UFC 4-010-01 8
Overview of historic preservation mandates for AT personnel 8
National Historic Preservation Act 8
National Register of Historic Places 9
Cultural resource assessments and National Register eligibility 9
SOI Standards for Rehabilitation 9
Mitigation of adverse impacts through detailed documentation 10

1 Site Planning: Standoff, Controlled Perimeters, and Vehicle Access Control 11

Differences between DoD and other federal AT site planning guidance 11
Chapter overview 12
Minimum standoff distances (B-1.1) 12
Controlled perimeter (B-1.1.1) 14
Parking and roadways (B-1.1.2) 26
Parking of emergency, command, and operations support vehicles (B-1.1.3) 37
Parking of vehicles undergoing maintenance (B-1.1.4) 37
Adjacent existing buildings (B-1.1.5) 38
Parking and roadway projects (B-1.1.6) 38
Trash containers (B-1.1.7) 39

2 Structural Design (UFC 4-010-01, B-2) 41

Structural strengthening and historic preservation conflicts 41
Structural rehabilitation challenges 41
Typical preservation-related issues 41
Preliminary considerations for AT/HP project teams 42
Blast loading issues for conventional construction systems 47

Quantifying terrorist blast loads for structural design *47*
Technology performance validation *48*
Differences between blast and seismic loading *48*
Blast loading of wood frame construction *49*
Progressive collapse avoidance (UFC Standard 6, B-2.1) 49
General considerations *49*
Characteristics of structural systems found in historic buildings *51*
Columns and walls (B-2.1.1) *55*
Exterior member removal (B-2.1.2) *66*
Floors (B-2.1.3) *71*
Structural isolation (UFC Standard 7, B-2.2) 73
Building additions (B-2.2.1) *73*
Portions of buildings (B-2.2.2) *74*
Building overhangs (UFC Standard 8, B-2.3) 74
Parking and roadway restrictions (B-2.3.1) *75*
Floors (B-2.3.2) *76*
Superstructure (B-2.3.3) *76*
Exterior masonry walls (UFC Standard 9, B-2.4) 77
Historic preservation issues for exterior URM wall rehabilitation *78*
Strengthening and reinforcing exterior URM walls *80*
Alternate mitigating measures for exterior URM walls *85*
Innovative new materials 91

3 Architectural Design: Reducing Glazing-Related Blast Hazards 93
Glazing hazards 93
Historic preservation issues 93
Complying with the SOI rehabilitation standards 94
Avoiding noncompliant solutions 97
Fragment retention film *97*
Fragment-catching devices *97*
UFC Standard 10: Windows, Skylights, and Glazed Doors (B-3.1) 98
Blast protection through balanced design *98*
Glazing material selection *99*
Glazing (B-3.1.1) *101*
Window, Skylight, and Glazed Door Frames (B-3.1.2) *102*
Mitigation (B-3.1.3) *110*
Window, Skylight, and Glazed Door Replacement Projects (B-3.1.4) *115*
Summary 118

4 Electrical and Mechanical Design (UFC 4-010-01, B-4) 119
Electrical/mechanical upgrades and historic preservation conflicts 119
Mechanical system types 122
Water systems *122*
Air systems *126*
Combined air/water systems *128*
High-velocity systems *128*

Other mechanical systems and appliances *129*
CBR threats and impact 130
Properties and detection of CBR agents *130*
Probability of CBR attack *131*
Buildings as highly desirable targets for CBR attacks *131*
HVAC systems and CBR exposure *132*
Defense schemes *133*
Protecting building occupants from CBR threats 135
Air intakes (UFC Standard 16, B-4.1) *137*
Mailroom ventilation (UFC Standard 17, B-4.2) *141*
Emergency air distribution shutoff (UFC Standard 18, B-4.3) *146*
Blast-related provisions for electrical and mechanical design 146
Utility distribution and installation (UFC Standard 19, B-4.4) *147*
Equipment bracing (UFC Standard 20, B-4.5) *149*
Under building access (UFC Standard 21, B-4.6) *152*

Summary and Recommendations 155
Summary 155
Recommendations 155

References 158

Report Documentation Page

Figures and Tables

Figures

Figure 1. For concealing surveillance equipment, a simple lamp post rather than an ornate one may be more appropriate for a military setting. Optical equipment can be mounted in place of lamps and thus kept out of view (Webster 2006). 17

Figure 2. Unless fabricated to withstand the baseline threat, most commercially available perimeter fixtures cannot be assumed to meet DoD minimum AT standards (PDC 2004). 18

Figure 3. Aesthetic fencing may be used to extend a controlled perimeter through more significant historic views (Webster 2006). 19

Figure 4. Place barrier walls at the curb where there is already a change in site elevation (DA 2005). 21

Figure 5. Boulders can be used to thwart vehicle access if they are part of the historic context (USAF 2006). 23

Figure 6. On historic properties, it is best to conceal surveillance equipment in building or site features if possible (Webster 2006). 25

Figure 7. In a campus approach, guardhouses can be used to control access to building clusters (Webster 2006). 28

Figure 8. Roadway edge treatments near ACPs can deter their misuse. 31

Figure 9. Deliveries must be screened or made to a centralized facility away from inhabited buildings (ERDC-CERL 2004). 32

Figure 10. Above-grade components of vehicle net barriers may create a visual challenge when installed a historic landscape (Universal 2005). 34

Figure 11. Reduced pavement widths can deter parking along roadways within the standoff (ERDC-CERL 2004). 35

Figure 12. Trash containers and smoking shelters are contemporary additions that detract from historic landscapes while providing bomb concealment opportunities (ERDC-CERL 2004). 40

Figure 13. Conventional welded structural steel frame beam/column connection. 52

Figure 14. Components of a reinforced concrete column. 53

Figure 15. Buckling of an unwrapped reinforced concrete column (Crawford, Malvar, and Morrill 2001). 54

Figure 16. Steel column with concrete-filled steel jacket. 56

Figure 17. Seismic application of a steel jacket on an existing concrete column (Morley Builders 1997). 57

Figure 18. Column ductile performance enhanced by CFRP hoop wrap (left); wrapping detail (right) (Crawford, Malvar, and Morrill 2001). 58

Figure 19. CFRP flexure strips applied under CFRP hoop wrap (Crawford, Malvar, and Morrill 2001). 59

Figure 20. Enhanced structural steel connection (upper illustration Houghton and Karns 2001). 61

Figure 21. Conceptual diagram of catenary action. 61

Figure 22. Conceptual diagram of punching shear. 62
Figure 23. Details of drop panel and column head connection enhancements. 63
Figure 24. Steel column and plate application (Ward 2004)..... 64
Figure 25. Outrigger beam and belt load-carrying system. 66
Figure 26. Typical reinforced concrete beam design for normal gravity loading..... 68
Figure 27. Reinforced concrete beam response to column loss. 69
Figure 28. Conceptual diagram of cable support system for structural redundancy. 70
Figure 29. AT issues related to building overhangs. 75
Figure 30. Example of historic building with infill panels (ERDC-CERL 2002). 78
Figure 31. Retrofitted Reinforcement by means of coring (Sanicki 1998). 82
Figure 32. Individual Durisol® block showing cavities for concrete and steel reinforcement (ERDC-CERL 2005). 85
Figure 33. Comparison of standoff required for CMU walls with and without sprayed polymer coating (ETL 02-4). 87
Figure 34. Polymer coating overlapping structural components (ETL 02-4). 87
Figure 35. Mechanically fastened geotextile catcher system (Coltharp and Hall 2003). 88
Figure 36. Cross section of geotextile fabric installation (ETL-1110-3-494)..... 88
Figure 37. Sheet steel application pretest (left) and posttest (right) (Coltharp and Hall 2003)..... 89
Figure 38. Steel stud partition system (Coltharp and Hall 2002). 91
Figure 39. Pentagon immediately after September 11, 2001, showing intact blast-resistant windows at right (DON 2001)..... 94
Figure 40. Blast load path through a window system. 99
Figure 41. Casement window manufactured to resemble a double-hung unit (left). Challenges of incorporating new casement hardware into fenestration designed for double-hung units (right). The interior wall was carved out to provide clearance for the casement cranks and locks (DA 2005). 104
Figure 42. Diagram showing frame bite..... 106
Figure 43. Window anchors in clay tile masonry (ENR 2003). 107
Figure 44. Window-flanking bracing transfers loads to floors and ceilings (PDC 2004)..... 113
Figure 45. Flexible frame blast-resistant window with collapse mechanism at mid-window (Oldcastle-Arpal, not dated)..... 116
Figure 46. Modern mechanical systems can negatively impact historic properties (ERDC-CERL 2005). 120
Figure 47. Ceilings dropped to accommodate new ductwork should be pulled away from historic fenestration. Historic radiators and operable windows and transoms should be retained (ERDC-CERL 2004). 120
Figure 48. Cast-iron radiators can be left exposed (left) or encased in cabinetry (right) (ERDC-CERL 2005). 123
Figure 49. Radiator loop system (Hayden 1996)..... 123
Figure 50. Two types of fan coil unit (ERDC-CERL 2005). 124
Figure 51. Protecting air intakes (CDC/NIOSH 2002). 137
Figure 52. Air intakes can be integrated into existing upper level architectural features such as a window (ERDC-CERL 2005). 139

Figure 53. Pressurization/filtration protection (Persily 2004). 143

Figure 54. Exhaust vents come in various configurations and should be selected to blend with the historic architecture (ERDC-CERL 2005). 144

Figure 55. This ceiling mounted equipment rack will likely need horizontal or diagonal bracing to comply with the UFC (ERDC-CERL 2005). 150

Figure 56. Crawl space vent openings must be small enough to prevent placement of hand-carried explosive devices beneath buildings (ERDC-CERL 2002). 153

Tables

Table 1. Structural rehabilitation methods for columns and their connections. 44

Table 2. Structural rehabilitation methods for load-bearing walls. 45

Table 3. Rehabilitation methods that enhance structural floor systems. 45

Table 4. Structural rehabilitation methods that protect interior spaces from wall fragmentation. 46

Table 5. E/M rehabilitation methods for mitigation of CBR attacks. 121

Table 6. E/M rehabilitation methods for blast protection.[1] 122

Table 7. Advantages and disadvantages of water systems. 125

Table 8. Advantages and disadvantages of air systems. 127

Table 9. Advantages and disadvantages of combined air/water and high velocity systems. 129

Preface

This study was conducted for the Office of the Deputy Under Secretary of Defense for Environmental Security under Legacy Resource Management Program Reimbursable Order 97/0100/701/A/W31RYO31164703/PO, "Antiterrorism Measures for Historic Properties." The technical monitor was L. Peter Boice, director, ODUSD (ES) EQ-LP.

The work was performed by the Land and Heritage Conservation Branch (CN-C) of the Installations Division (CN), Construction Engineering Research Laboratory (CERL), U.S. Army Engineer Research and Development Center (ERDC). The project manager was Julie L. Webster. At the time of publication, Dr. Michael L. Hargrave was Acting Chief, CEERD-CN-C, Dr. John T. Bandy was Chief, CEERD-CN, and Dr. William D. Severinghaus, CEERD-CV-ZT, was Technical Director of the Military Lands business area. The Acting Deputy Director of ERDC-CERL was Dr. Kirankumar Topudurti and the Director was Dr. Ilker Adiguzel.

The following individuals are gratefully acknowledged for their generous contribution of information and other input to the early drafts of this report:

- Robert Beardsley, Fort Riley, KS (formerly)
- Curt Betts, USACE Protective Design Center, Omaha, NE
- James Carucci, Vandenberg AFB, CA
- Theresa DelaGarza Carwise, National Guard Bureau, TX
- Edward Conrath, USACE Protective Design Center, Omaha, NE
- Doug Cubbison, West Point, NY (formerly)
- Christy Davis, Kansas State Historical Society, Topeka, KS
- Hugo Gardea, Fort Bliss, TX
- Susan Goodfellow, National Guard Bureau, MA
- Jennifer Groman, Army Environmental Center, Aberdeen Proving Ground, MD
- Mike Jackson, Illinois Historic Preservation Agency, Springfield, IL
- Larry Jones, Fort Benning, GA
- Daniel Kurmel, USACE Protective Design Center, Omaha, NE
- Brian Lione, Legacy Resource Management Program (formerly)
- William Manley, Navy Region Southwest, San Diego, CA

- Rick Nelson, Washington Headquarters Services, Pentagon
- Brad Patterson, Texas Historical Commission, Austin, TX
- Al Rohr, Peterson AFB, CO
- Paul Scoggins, Peterson AFB, CO
- Pamela Schenian, Fort Monroe, VA
- William Veys, USACE Protective Design Center, Omaha, NE

The Commander and Executive Director of the ERDC was COL Richard B. Jenkins and the Director was Dr. James R. Houston.

Unit Conversion Factors

Multiply	By	To Obtain
cubic feet	0.02831685	cubic meters
cubic inches	1.6387064 E-05	cubic meters
degrees Fahrenheit	(F-32)/1.8	degrees Celsius
feet	0.3048	meters
foot-pounds force	1.355818	joules
gallons (U.S. liquid)	3.785412 E-03	cubic meters
inches	0.0254	meters
inch-pounds (force)	0.1129848	newton meters
miles (U.S. statute)	1,609.347	meters
miles per hour	0.44704	meters per second
mils	0.0254	millimeters
pounds (force)	4.448222	newtons
pounds (mass)	0.45359237	kilograms
pounds (mass) per cubic foot	16.01846	kilograms per cubic meter
pounds (mass) per cubic inch	2.757990 E+04	kilograms per cubic meter
pounds (mass) per square foot	4.882428	kilograms per square meter
pounds (mass) per square yard	0.542492	kilograms per square meter
quarts (U.S. liquid)	9.463529 E-04	cubic meters
square feet	0.09290304	square meters
square inches	6.4516 E-04	square meters
square miles	2.589998 E+06	square meters
tons (force)	8,896.443	newtons
tons (2,000 pounds, mass)	907.1847	kilograms
yards	0.9144	meters

Introduction

Background

As a result of the terrorist attacks of September 11, 2001, the Department of Defense (DoD) military services rapidly adapted their force protection and antiterrorism (AT) policies and practices to confront a variety of new adversaries who use "asymmetric strategies [and] threats that avoid or circumvent our current capabilities altogether" (Fastabend and Simpson 2004). An asymmetric strategy is one "in which the threat differs qualitatively in operational concept or assets employed from U.S. concepts and assets" (Bennet et al. 1999).

DoD's basic construction criteria document addressing the asymmetric threat to U.S. military properties is Unified Facilities Criteria (UFC) 4-010-01, *DoD Minimum Antiterrorism Standards for Buildings* (October 2003). The document, referred to in this report as "the UFC" for brevity, provides guiding principles, design and rehabilitation strategies, and baseline threat assumptions for installation commanders, facility managers, and planners. The UFC also outlines 22 specific AT standards and 17 supplementary recommendations for new and existing buildings. Those standards are divided into four topical areas:

- site planning
- structural design
- architectural design
- electrical and mechanical design.

The standards address AT property enhancements that could range from tree pruning for visibility to structural strengthening to resist blast effects and progressive collapse. The standards defined in UFC 4-010-01 are mandatory for most of the places where military personnel, DoD civilian employees, and contractors work and live on installations.

Thousands of facilities to which UFC 4-010-01 applies are *historic buildings*, which in this report means buildings that are either listed or eligible for listing on the National Register of Historic Places. The *National Register*, as it is called in this report, is part of the body of regulation implementing the National Historic Preservation Act of 1966, as amended. Sec-

tion 106 of the National Historic Preservation Act (NHPA) requires Federal agencies to consider the impacts of significant actions (called *undertakings*) on historic properties. Section 106 of Title 36, Code of Federal Regulations, Part 800 (36 CFR 800), *Protection of Historic and Cultural Properties*, requires DoD to:

1. determine whether an action, such as an AT modification, is an undertaking as defined by the NHPA
2. identify the area of potential effect for any undertaking, including the structure and its surrounding area
3. consult with the State Historic Preservation Officer (SHPO) to identify any historic properties within the area of potential impact
4. determine the specific impacts of the undertaking on affected historic properties
5. seek to avoid, resolve, or mitigate adverse impacts in consultation with the SHPO and other stakeholders
6. execute an agreement
7. implement the provisions of the agreement.

No undertaking may proceed until a Section 106 review is completed. The length of the delay depends to a large extent on the complexity and scope of the project. The DoD has a dual obligation to complete the review in a timely manner, particularly for projects that affect personnel safety and security, and to ensure that properties representing significant aspects of U.S. military history and culture are not severely or irreparably degraded. These dual obligations can be fulfilled most expediently through cooperative work by project teams that include facility security engineering and historic preservation specialists. However, such multidisciplinary teams would greatly benefit from practical, plain-language guidelines that promote the collaborative development of affordable solutions to compliance conflicts that arise when AT undertakings are required on historic properties.

Objectives

The objectives of this study were to (1) identify common circumstances in which UFC 4-010-01 undertakings will conflict with the requirements of the NHPA and (2) develop specific guidelines that will help installation command, AT, cultural resources, and facilities personnel to rapidly resolve those conflicts in a way that satisfies both sets of requirements.

Approach

The following tasks were carried out to complete this study:

1. UFC 4-010-01 was analyzed from a historic preservation perspective, and the Protective Design Center, U.S. Army District, Omaha, was consulted to verify the interpretation of various standards.
2. The UFC 4-010-01 standards most likely to raise NHPA compliance issues were identified.
3. AT standards and practices developed for other Federal agencies were reviewed for applicability to DoD historic properties.
4. Manufacturer literature was surveyed to determine the state of the market in ready-to-use technologies that may support the antiterrorism and historic preservation (AT/HP) dual compliance requirements for military installations.
5. Strategies and methods were developed to help installation personnel achieve AT/HP dual compliance.

It was determined that some AT standards in UFC 4-010-01 present no significant conflict with NHPA requirements for historic properties. The standards relevant to the research objective were those addressing the following issues:

- access control, including vehicle corridors and parking
- perimeter control, including fencing, plantings, and landforms
- building standoff distances from roadways and parking areas
- debris minimization and control, especially related to window replacement and retrofit accessories
- structural strengthening to provide the required level of protection where historic buildings do not have adequate standoff
- progressive collapse prevention involving structural strengthening and redundancy
- airborne contamination protection involving the replacement or addition of air-handling systems
- other protective design measures that can help meet the minimum AT standards with little or no impact on historic significance.

Scope

This study addresses standards and supporting text from the 8 October 2003 version of UFC 4-010-01. Because UFCs are updated periodically,

installation project teams must be sure to base their work on the most current version. A revised version of the UFC, completed after the conclusion of this study, is currently awaiting signature. It aligns many DoD protective criteria more closely with industry standards established by ASTM International and others.

UFC 4-010-01 includes standards for expeditionary and temporary construction that may be applicable to thousands of World War II temporary wooden structures. Although some information on this topic is presented, it mostly falls outside the scope of this study. Wood frame construction generally offers little protection from blast effects, and large standoff distances are the primary protective tactic.

The guidelines presented in this report were developed for historic properties, but they are suitable for any existing building that must receive AT rehabilitation with close attention to aesthetics, visual design integrity, or public image.

Terrorist goals and historic military properties

It has been proposed that two of the four general motivations for a terrorist attack are symbolism and ideological expression (Drake 1998). A symbolic attack is intended to create a reaction in the "audience" for the act; an expressive attack is an "emotional" act rather than tactical or strategic (Drake 1998, p 10, 14). The 1995 destruction of the Murrah Federal Building in Oklahoma City may be considered both an expressive terrorist attack, motivated by an extremist ideology (Drake 1998) and a "symbolic act of war against the Federal government" (Martin 2003, p 15). The September 11 targets were clearly symbolic, the Pentagon being headquarters and icon of U.S. global military power and the World Trade Center being an international symbol of U.S.-led global capitalism.

Historic buildings and sites carry high symbolic value and often represent the prestige, power, or cultural identity of a nation (Martin 2003, p 266). In addition to spreading fear and a sense of vulnerability through the public, attacks on iconic properties create a powerful sense of cultural desecration in the targeted population (Martin 2003, p 266). An iconic target site, including a military property of historic significance, may support the powerful self-justification mechanisms that help terrorists morally disengage from their own acts by attributing blame or responsibility to the victim (Bandura [in Reich 1990], pp 161 – 163, 180 – 182, 184 – 185). Not

every property with potential symbolic value to terrorists is historically significant to Americans, but for terrorists with a symbolic or expressive agenda, the historic properties on military installations are logical targets of potentially high visibility.

A terrorist's first consideration in selecting a symbolic target may be whether the property has an iconic status to Americans. The purpose of UFC 4-010-01 for any inhabited DoD building is to protect the life and safety of its occupants; the AT standards are not intended to protect the building itself from damage, regardless of its historic status. However, in an AT undertaking, the purpose of the Federal historic preservation mandates is to protect buildings from damage or degradation resulting from work initiated to comply with UFC 4-010-01.

It can be seen, then, that the terrorist threat to historic military properties creates two concurrent building-related compliance obligations for installations: AT undertakings must meet the standards published in UFC 4-010-01 while avoiding unmitigated destruction or degradation of properties listed or eligible for listing on the National Register of Historic Places. The most effective and expedient way of meeting these dual compliance obligations, and resolving conflicts between the two that inevitably arise, is to establish project teams that include both protective facility design and cultural resources expertise. The discussions below are intended to help familiarize each professional community with the perspective of the other in order to promote more productive collaboration.

Overview of UFC 4-010-01 for cultural resources personnel

Applicability and exemptions

UFC 4-010-01 is one of three major government criteria documents promulgating AT standards for federal properties. The other two are the Department of State *Architectural and Engineering Design Guidelines for U.S. Diplomatic Mission Buildings* (June 1997) and the *ISC Security Design Criteria for New Federal Office Buildings and Major Modernization Projects* (General Services Administration 2003). All three documents have important similarities, but they are not interchangeable because each standards proponent has a different mission, facility requirements, and baseline threats. Therefore, installations are directed to use the UFC as their primary source of AT criteria for buildings, including historic properties.

The standards published in UFC 4-010-01 are prescribed under Military Standard (MIL-STD) 3007 and apply to the military departments, defense agencies, and DoD field activities in accordance with the USD(AT&L) memorandum dated 29 May 2002. The requirement to comply with UFC 4-010-01 amounts to a military order and has the authority of Federal law.

As its title indicates, UFC 4-010-01 represents the minimum standards required to prevent mass casualties in buildings erected using conventional construction methods. Additional standards are in place or are being developed to address the needs of properties that are required to provide a higher level of protection because of their mission-criticality, high-value contents, or more powerful baseline threat.

Applicability of the UFC is based on the nature and density of building occupancy, the basic categories being *inhabited*, *billeting*, and *primary gathering*. These terms, fully defined in UFC 4-010-01 (pp A-1 – A-3), are summarized below to help familiarize the reader with the language:

- Inhabited buildings are those routinely occupied by 11 or more people at a density of greater than one person per 40 gross square meters (430 gross square feet).
- Billeting routinely houses 11 or more unaccompanied DoD personnel, regardless of density.
- Primary gathering buildings are routinely occupied by 50 people or more at the same density as inhabited buildings; the category also includes family housing having 13 or more living units per building, regardless of occupancy size and density.

Industrial, maintenance, and storage facilities are usually considered non-inhabited by UFC 4-010-01 and therefore are not subject to its criteria. However, such building types may have independent protective design requirements based on other criteria that are beyond the scope of consideration here.

A restricted version of the DoD Minimum Antiterrorism Standards for Buildings is maintained For Official Use Only (UFC 4-010-02). That version includes technical information not cleared for public release.

Baseline threats

The primary threats addressed by the UFC are expressed in terms of explosive charge weights based on the most likely modes of delivery by a terrorist:

- stationary bombs concealed and delivered in vehicles or watercraft
- bombs placed on building grounds where vegetation or outdoor infrastructure offer concealment opportunities
- mail and parcel bombs
- indirect-fire weapons such as mortars and hand grenades
- direct-fire weapons such as shoulder-launched rockets
- fire
- chemical, biological, or radiological (CBR) agents.

Table 2-1 in UFC 4-010-01 defines the levels of protection recognized by DoD for new and existing buildings, and indicates the maximum acceptable casualties and building damage at each level. The table also includes information on casualties and damage expected when a building falls below the minimum AT standards. The fundamental requirement of the lowest level of protection, called *very low*, is to prevent mass fatalities.

Protective design goals

In order to prevent mass fatalities resulting from a bomb attack, UFC 4-010-01 supports the following protective design goals:

- providing sufficient standoff to attenuate blast effects
- preventing structural collapse, the top cause of deaths in blast attacks
- minimizing flying debris, the top cause of nonfatal injuries
- providing effective building layout and utilization to isolate occupied space and egress from the direction of greatest threat
- interrupt or limit the mobility of airborne contaminants indoors
- provide means of mass notification to keep building occupants informed.

UFC compliance triggers

For existing buildings undergoing repair, rehabilitation or reutilization, compliance with UFC 4-010-01 (Section 1-6.2 – 1-6.3) is required when:

- renovation costs will exceed 50% of replacement cost
- converting building utilization to a category covered by the UFC
- executing any planned glazing replacement project
- constructing an addition that attaches at least 50% more gross area to the existing building.

Historic preservation compliance protection in UFC 4-010-01

Section 1-9 of the UFC directly addresses the issue of compliance with the NHPA and related mandates. The main points are that:

- historic and archaeological properties are covered by the UFC where there is a perceived threat to personnel and critical resources
- implementation of the UFC does not supersede DoD's legal stewardship obligations toward cultural resources, and an assessment of adverse impacts on historic properties shall be performed before any AT undertakings are begun
- consultations related to NHPA compliance should not be prolonged or prevent the timely implementation of the AT standards
- historic preservation mandates may be suspended as part of "an essential and immediate response" to a presidential declaration of natural disaster or imminent threat to national security.

Overview of historic preservation mandates for AT personnel

National Historic Preservation Act

The NHPA is based on principles set forth in the Historic Sites Act of 1935 but strengthens protection of significant U.S. historic resources. The NHPA promotes the advancement of knowledge of U.S. historic resources, establishes principles for identifying and administering them, and requires their preservation or, if not possible, detailed documentation and archiving. Of particular interest to DoD is the Act's desire to accelerate Federal preservation programs and activities. DoD generally defers to NHPA Sections 106 and 110 guidance to fulfill its preservation responsibilities under Federal law and regulation. These Federal mandates apply even where conflicts arise from the need to comply with UFC 4-010-01. However, the NHPA does include a provision that empowers the Secretary of the Interior to establish regulations under which preservation requirements may be waived in response to "a major natural disaster or an imminent threat to national security" (16 U.S.C. 470h-2(j) – Disaster waivers).

National Register of Historic Places

The National Register is the nation's official list of cultural resources considered worthy of preservation after a specified review process. Established under Section 101 of the NHPA, the National Register has identified and documented about 75,000 districts, sites, buildings, structures, and objects that are significant in American history, architecture, archaeology, engineering, and culture. The National Register includes both landmarks of American achievement and properties that reflect the everyday lives of ordinary people in communities across the nation, including military installations.

Cultural resource assessments and National Register eligibility

Properties listed or eligible for listing in the National Register have undergone an eligibility determination process. The process establishes *historic significance* under four criteria and property *integrity* against seven metrics. For military installations that have completed exterior-only "windshield surveys" or other cursory evaluations of a property requiring an AT undertaking, it will be necessary to conduct a more detailed cultural resource assessment to determine which building features may be impacted by the work.

A comprehensive assessment can establish or refine a property's list of character-defining features, which are physical features that are essential to conveying a property's historic significance. These assessments also note features on historic buildings that are later additions or do not contribute to the building's historic character. Such features may be present as a result of previous renovations, which may have been carried out periodically to modernize the building or reconfigure it for a different military mission. Distinguishing character-defining features from those that do not contribute significance will help project teams focus due attention on areas of potential adverse impact without unnecessarily restricting other aspects of the AT undertaking.

SOI Standards for Rehabilitation

The Secretary of the Interior is the proponent of Federal regulations on how a historic building should be treated during an undertaking. These regulations (36 C.F.R. 76) include a set of standards applicable to rehabilitation projects called the Secretary of the Interior's Standards for Rehabili-

tation (referred to in later text as the “SOI Standards”). The SOI Standards define rehabilitation as a

> process of returning a property to a state of utility, through repair or alteration, which makes possible an efficient contemporary use while preserving those portions and features of the property which are significant to its historic, architectural, and cultural values.

The intent of the SOI Standards is to support the long-term preservation of a property's significance through the preservation of historic materials and features. The SOI Standards apply to historic buildings of all materials, construction types, sizes, and occupancy, both exterior and interior, as well as attached, adjacent, or related new construction. The SOI Standards are to be applied to specific rehabilitation projects with due consideration of economic and technical feasibility.

Mitigation of adverse impacts through detailed documentation

When an adverse impact on a historic property is unavoidable in order to comply with UFC 4-010-01, it may be necessary to mitigate the impact through documentation under the Historic American Buildings Survey (HABS), Historic American Engineering Record (HAER), or Historic American Landscape Survey (HALS). These documentation series are used to preserve an accurate, detailed record of a historic property that can be used in future research and other preservation activities. The surveys document the historic property’s construction method, condition, and appearance before any AT alterations using photographs, architectural drawings, construction specifications, contemporary publications, and oral histories. The surveys require different levels of documentation for different types of mitigation, and the documentation must be completed and transmitted to a designated archival repository before physical building modifications may begin.

1 Site Planning: Standoff, Controlled Perimeters, and Vehicle Access Control

Differences between DoD and other federal AT site planning guidance

To date, much of the available site design guidance for antiterrorism (AT) has been developed by the National Capital Planning Commission (NCPC) and Interagency Security Committee (ISC).* The NCPC is the federal government's planning agency in the District of Columbia and surrounding Maryland and Virginia counties. The ISC is a group of federal agencies and officials, chaired by the General Services Administration (GSA), responsible for policies, standards, strategies, and enhancements for security in and protection of federal facilities, including their implementation. NCPC and ISC objectives and guidance largely address design and threat scenarios typical of public federal buildings in urban settings. Most DoD buildings, however, are less public: they tend to be located outside of metropolitan areas and inside suburb-like cantonments within the installation fenceline. Therefore, even though NCPC, ISC, and DoD antiterrorism guidance addresses virtually all the same security issues, the DoD standards are based on different design assumptions and approaches. For that reason, many well accepted NCPC and ISC site strategies are not practical and have no contextual precedent at the typical military installation.

Landscape architects and military AT planners do not look at building grounds in the same way. In the context of UFC 4-010-01, *standoff* — the distance between a building and a potential bomb location — is considered to be a functional extension of a building. In the UFC, the express purpose of standoff is to provide a spatial factor of safety between building occupants and a stationary vehicle bomb (UFC 4-010-01, 2-4.1.1.1).† To landscape architects the following discussions of historic landscape elements may appear to imply that the landscape is subordinate in significance to the building. For the purpose of directly addressing the requirements of UFC 4-010-01 that implication is unavoidable because the objective of the UFC is to protect people located inside buildings. However, military properties are subject to the requirements of the National Historic Preservation

* The ISC was created by executive order on 19 October 1995 (EO 12977).

† UFC 4-010-01 does not address moving vehicle bombs.

Act (NHPA) of 1966 (as amended) and the Secretary of the Interior's (SOI) Standards for Rehabilitation (1995), and those mandates make it clear that historic landscapes share equal status with other historic properties.

Chapter overview

Implementation of UFC Standard 1, *Minimum Standoff Distances*, can alter features that directly contribute to the historic character of a site (i.e., landscape). In some cases conformance to Standard 1 may require the alteration, removal, relocation, or abandonment of contributing elements. When such actions comprise an undertaking under Section 106 of the NHPA, they must be implemented in accordance with the SOI rehabilitation standards to ensure that they do not damage or destroy materials, features, or finishes that are important in representing the site's historic character. In order to ensure that viable AT solutions are developed with full consideration of federal preservation mandates, planning and security engineering personnel should collaborate with historical architects, historical landscape architects, and cultural resource specialists to verify that site re-engineering does not significantly degrade the character-defining features of the historic landscape.

This chapter discusses principles and methods to consider in order to comply with federal preservation mandates and the minimum standoff distance requirements of UFC Standard 1.* Emphasis is placed on solutions that are the least disruptive and least expensive. The discussion frequently cross-references UFC 4-010-01, Table B-1 and the SOI Standards for Rehabilitation, so ready access to those documents will benefit the reader.

Minimum standoff distances (B-1.1)

Minimum standoff distances prescribed by UFC 4-010-01, Table B-1 are based on building utilization, the presence or absence of a controlled perimeter, and either of two assumed baseline explosive weights. The distances were calculated on the basis of their ability to attenuate the destructive force of an explosion before it reaches a building; the purpose is *not* to prevent property damage, but to avoid mass casualties. Many installation cantonments are densely constructed, leaving little space to serve as ade-

* Other UFC site planning standards are Standard 2 (Unobstructed Space), Standard 3 (Drive-Up/Drop-Off Areas), Standard 4 (Access Roads), and Standard 5 (Parking Beneath Buildings or on Rooftops).

quate standoff as prescribed by the UFC. Urban development near an installation often leaves little land available outside the fenceline for AT-related site re-engineering uses. The following antiterrorism/historic preservation (AT/HP) resolutions address projects on densely developed installations.

Standoff — Real Estate Acquisition. Although DoD is attempting to divest itself of overall acreage, in some cases the acquisition of land beyond the fenceline may be the most cost-effective solution to establishing critical standoff for a densely developed site. Historic preservation concerns associated with this approach will generally relate to the redefinition of historic site boundaries. The mitigation would involve visual preservation of the historic boundary.

Standoff — Unoccupied Space as Standoff. Uninhabited portions of inhabited buildings require no standoff and may themselves serve as standoff for purposes of protective design calculations.

Standoff — Repurpose Building Portions as Standoff. Where a portion of an inhabited building does not have adequate standoff from parking or roadways, repurpose that part to an uninhabited use. An example is provided in UFC 4-010-01 within the definition of 'inhabited building' (UFC 4-010-01, p A-3). This resolution may require application of SOI Standard 1, which addresses compatible reuse of historic properties. If feasible, new uses of previously inhabited space should minimize change to character-defining features and spatial relationships. Low-impact reutilization schemes such as storage can be implemented without any significant modification to historic interiors. However, precautions should be taken to protect historically significant building features from activities related to the new use.

Standoff — Relocate Inhabited and High-Occupancy Functions. Relocate inhabited and

> higher-occupancy functions to buildings with adequate standoff and contemporary reinforced construction. This will preserve National Register-eligible buildings, make them available for lower-occupancy functions that require less invasive AT upgrades, and reduce overall AT-related expenditures as facility functional assignments are optimized to conform to the UFC.

Around historic properties, implementation of the prescribed standoff distances may require undertakings that affect vehicle-accessible pavements or land use. In general, such undertakings will involve (1) the introduction of vehicle access-control infrastructure or (2) the removal or abandonment of roadways and parking areas within the standoff zone. In the first case, the addition of access-control structures (e.g., jersey barriers) poses concerns about introducing elements or materials that diminish the historic character of the building and grounds. In the second case, the removal or abandonment of roads or parking eliminates traditional land uses in ways that may be visually or functionally incongruous to users.

Controlled perimeter (B-1.1.1)

In the context of UFC 4-010-01, the purpose of a controlled perimeter is to channel all vehicles through a limited number of access control points (ACPs). It is important to note that the UFC definition of controlled perimeter (p A-1) does not encompass threats posed by unauthorized pedestrians; protection against intruders is addressed under Unobstructed Space (UFC Standard 2, B-1.2). For purposes of this discussion, a controlled perimeter consists of a continuous vehicle barrier surrounding a property and ACPs that are staffed and equipped to detect explosives and deny entry to unauthorized vehicles. In terms of the UFC, access control is considered more of an operational issue than an engineering one.

Installation personnel sometimes incorrectly assume that the UFC requires a controlled perimeter to establish control of parking areas and access roads. The result is often a hastily erected, unsightly perimeter of bollards or jersey barriers around a building or roadway. Although such constructs may be determined necessary by the installation commander for high-value assets, they are not required to achieve vehicle control as intended by the UFC.

The erection of a new controlled perimeter in a historic district can introduce NHPA review and compliance issues. However, a new controlled perimeter may relieve a portion of the standoff requirement around a historic property. Inside a controlled perimeter, the minimum standoff distances for inhabited buildings may be reduced from 82 ft to 33 ft. For higher-occupancy buildings such as billeting, the standoff may be reduced from 148 ft to 82 ft. Therefore establishing a controlled perimeter may avoid more difficult preservation problems related to structural strengthening or removal of other historic contributing elements.

Standard commercial products commonly used in controlled perimeters, such as chain link fences, jersey barriers, and bollards, can have a negative impact on historic properties. Such additions to the landscape tend to express a defensive atmosphere that diminishes the quality of life on the installation and negatively influences public perceptions. A common example is the enclosure of installation assets within chain-link fencing topped with barbed or razor wire, which undermines the public image of confidence and readiness that an installation commander wishes to present to the host community. Furthermore, unless the fence is constructed with superior anchorage and cabling woven through the mesh, it may not even be counted on to thwart a determined adversary in a vehicle. Similar problems can easily arise using other commercial perimeter hardware.

Access control points and perimeter infrastructure should communicate organization, control, and efficiency without looking like a theater of operations. Alternatives are available that can meet the minimum performance standards for a controlled perimeter and conform to historic preservation mandates. Even when a sense of urgency accompanies an AT-related undertaking, rushed execution of stopgap measures can create more problems than it solves. Substandard solutions will be unsatisfactory both in terms of AT performance and historic preservation compliance, and replacing them leads to unnecessary time and resource costs for the installation. A well planned, well designed long-term solution is always the most effective way to meet AT and historic preservation requirements at an affordable life-cycle cost.*

If designed landscape architecture elements or site furnishings are contributing elements in the historic landscape, 'hardened' replacement items

* In any case where an attack is certain and imminent, however, installation security and mission take precedence over the DoD minimum AT standards and historic preservation rules.

of the same type may be substituted if they comply with the SOI Standards for Rehabilitation. Those standards are based on the principle that a property embodies a physical record of its time, location, and utilization. Rehabilitation activities that present a “false sense of historical development” are to be avoided (SOI Standard 3). Additions, alterations, and replacement infrastructure must avoid the destruction of “historic materials, features, and spatial relationships that characterize the property” (SOI Standard 9).

An aspect of the SOI rehabilitation standards that may be counter-intuitive to installation personnel is that features introduced as part of any rehabilitation should intentionally be differentiated from historic features in order to avoid conveying a false impression of historic authenticity. The SOI standards require that rehabilitation work be compatible with original infrastructure in terms of materials, features, size, scale, proportion, and massing but deliberately avoid any attempt to recreate or mimic the original (SOI Standard 9). Figure 1 shows a lamp post incorporating surveillance technology that might be useful as part of a controlled perimeter. Its ornate design, however, may not be appropriate for use on many historic military properties.

Figure 1. For concealing surveillance equipment, a simple lamp post rather than an ornate one may be more appropriate for a military setting. Optical equipment can be mounted in place of lamps and thus kept out of view (Webster 2006).

Depending on individual project constraints and opportunities, the following resolutions may be appropriate and effective for establishing a controlled perimeter. They may be used individually or in various combinations to best meet site-specific requirements.

Controlled Perimeter — Gated Communities. If it is not feasible to construct and supervise a controlled perimeter because of the installation's size, then it may be advisable to design and construct a controlled perimeter around the cantonment or subsets of it. AT/HP concerns would center on the selection of perimeter hardware that complements the property's historic character. Historically significant natural and designed boundary features (e.g., mature tree stands or walls) should be exploited to the maximum extent feasible. In all cases where perimeter hardware is installed it must be expressly designed and fabricated to resist the baseline threat. If not, bar-

rier components can become dangerous projectiles in an explosion (Figure 2).

Figure 2. Unless fabricated to withstand the baseline threat, most commercially available perimeter fixtures cannot be assumed to meet DoD minimum AT standards (PDC 2004).

Controlled Perimeter — On-Post Embedded Compounds. Creating restricted-access areas inside the installation boundary, designed to function at different scales and gradients of protection, may also be a viable solution. Common examples of restricted-access areas include motor pool compounds, airfields, and special operations complexes. Implementation of this strategy requires that perimeter structures are selected and implemented to avoid historic integrity degradation of the site. Such an approach may not be feasible or effective, however, for properties that must be accessible to numerous contractors, courier services, or members of the general public, such as public works or civil engineering facilities.

Controlled Perimeter — Fencing. Fencing is not a mandatory component of a controlled perimeter. Any terrain or landscape feature that thwarts vehicle access and redirects vehicles to an ACP can contribute to perimeter control. But if new fencing is the method of choice* in a historic landscape, it is important to make

* Although it is an incidental concern in the context of Standard 1, it is nevertheless important to place fencing away from vertical site elements (e.g., trees, berms, and buildings) that would serve as climbing aids. Likewise, it is critical that the fence itself deters climbing by having few handholds. Other

the partitions as inconspicuous as possible. Lightweight black materials are generally the least visible. Green materials can be difficult to match, overly bright, and can discolor with age. Higher-quality fencing (e.g., simple, decorative styles that are reminiscent of wrought iron) may be desirable at significant historic vantage points. To economize, the higher-quality materials may be augmented with more utilitarian materials at minor views (Figure 3).

Figure 3. Aesthetic fencing may be used to extend a controlled perimeter through more significant historic views (Webster 2006).

Controlled Perimeter — Bollards. Bollards are commonly used to establish an expedient controlled perimeter around high-value assets.* Because this method of protection can in fact call attention to critical DoD assets and degrade historic sites, an integrated streetscape or campus approach to their

fence-related security features such as steel cabling, fabric anchors, and barbed wire are covered in Section 2 of MIL-HDBK-1013/10 (14 MAY 1993), *Military Handbook Design Guidelines for Security Fencing, Gates, Barriers, and Guard Facilities*.

* To determine if a building is a high-value asset, refer to UFC 4-020-01, DoD Security Engineering Facilities Planning Manual (draft 01 March 2006).

placement is recommended. Both approaches address the security requirement from a landscape perspective by considering native topography, existing site features, vehicle circulation and access, and the security of adjacent facilities. The blending of bollards with other barrier types and site features can protect multiple high-value assets without drawing attention to them. Individual bollards can be designed to blend with site architecture or can be concealed in native vegetation to deemphasize their presence.

Controlled Perimeter — Barrier Walls. In most cases, existing historic walls can be strengthened to hinder vehicle access, and they may even be structurally reinforced with anti-ram and debris confinement capabilities to meet additional security requirements. If a historic wall is located inside a building's unobstructed space zone (UFC 4-010-01, Standard 2), surveillance equipment may be used to observe any obscured areas. When introducing new barrier walls into historic landscapes, retaining walls or knee (i.e., plinth) walls should be integrated with site topography and fixtures to avoid degrading historic views. It may be desirable to locate new barrier walls away from the building, especially out to a street or curb that already breaks the horizontal plane (Figure 4). One type of barrier wall, historically used in England to prevent livestock from wandering estate grounds, may have AT applications. The construct, called a ha-ha (or haw-haw), combines features of the retaining wall and plinth wall to divide a parcel of land without disrupting its appearance as a single continuous lawn or field. A ha-ha imposes a change in elevation that is hidden from view within the building. Where the ground is mostly level, a ditch and berm may be engineered to help conceal the ha-ha.

Figure 4. Place barrier walls at the curb where there is already a change in site elevation (DA 2005).

Controlled Perimeter — Integrated Site Features. Steps, ramps, railings, terraces, islands, orbs, obelisks, and piers are all obstacles that can deny vehicle access if specified and installed for that purpose. The historic preservation principles for their implementation are the same as those for barrier walls. Elements that contribute to a site's historic significance can often be unobtrusively reinforced. New fixtures must be selected or designed to harmonize with the historic landscape. Reinforced concrete terraces and islands may include plantings to soften unsightly hard lines that may degrade historic landscape integrity. The run and rise of steps and ramps are the main characteristic that impedes vehicle movement. Unobstructed space requirements (UFC 4-010-01, Standard 2) apply to all of these obstacle types. As with other approaches, various combinations of site features can be used with other types of natural or constructed physical barriers for continuous perimeter control.

Controlled Perimeter — Site Furnishings. Site furnishings such signs, commemorative statues and heraldry, flagpoles, lampposts, planters, benches, tables, recreational equipment, and trash receptacles

may play a role in AT site redesign to enhance perimeter security. Such decorative and functional amenities are found on any military installation, but their placement is usually intermittent and therefore not effective for vehicle control unless integrated with other, more contextual barriers and site features. These items can be useful tools in an AT site redesign for a historic property. They can be used in multiples or in combination with other site features to provide a continuous barrier against unauthorized vehicles. Existing furnishings must be reinforced or replaced with new amenities designed to prevent vehicle access. Although beyond the scope of the UFC, site furnishings can be used to protect high-value assets without the negative impact of jersey barriers and other expedient temporary solutions.

Controlled Perimeter — Boulders. This resolution is appropriate only for historic sites in regions where boulders are native features and fit into the designed historic context. Successful implementation of this resolution requires the integration of boulders into landscape features such as berms and vegetation. Boulders should rise at least 36 in. above grade and be spaced at intervals of no more than 48 in. to prevent vehicles from passing between them. (This interval also allows maintenance of landscape and security features.) Boulders should be embedded in a soft base with at least 1/3 of their total height below grade. Alternatively, they may be anchored securely to prevent a vehicle from pushing them aside. The natural appearance of this solution can be enhanced by using varied sizes, selecting regionally appropriate color choices, and applying native lichen (a naturally occurring crustlike symbiotic growth of fungus and algae). Figure 5 illustrates how boulders may be used.

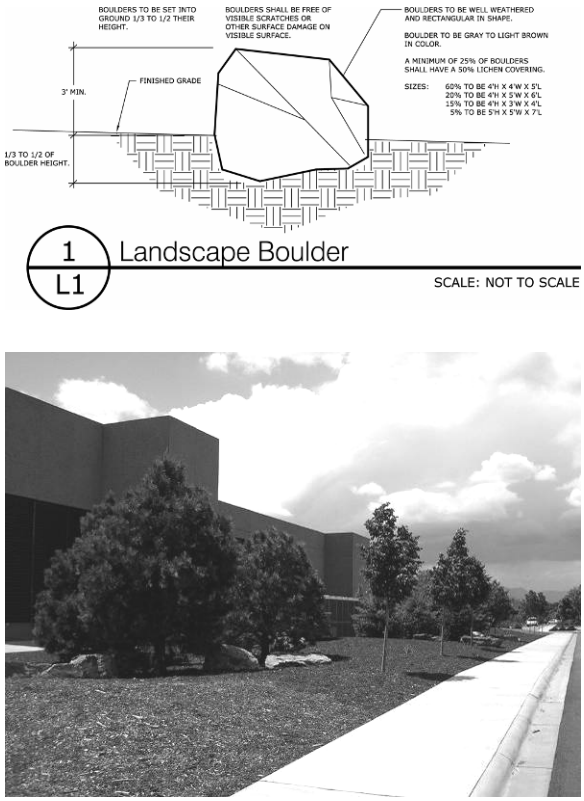

Figure 5. Boulders can be used to thwart vehicle access if they are part of the historic context (USAF 2006).

Controlled Perimeter — Dense Vegetation Stands. Natural and designed vegetation stands (e.g., trees, shrubs, and hedges) can act as a controlled perimeter if they are strong and dense enough to deter vehicle access. Healthy, properly maintained vegetation will generally retain its strength and growth patterns. Thick shrubs and hedges with sharp or thorny cover have the added benefit of deterring pedestrian intruders, but should be used judiciously to avoiding creating problems for legitimate site users. This strategy is particularly suitable for historic sites with existing perimeter vegetation.

Controlled Perimeter — Bodies of Water. Natural (e.g., rivers, streams, and marshes) and engineered (e.g., fountains, pools, and canals) water bodies can be effective perimeter barriers if they are not drivable.* It

* According to UFC 4-010-01, in the absence of a defined perimeter beyond a shoreline, the mean high-

is assumed that an adversary wants to pass unnoticed, so the body of water need only be deep enough to make passage difficult and conspicuous. Existing water features on a historic site are almost always favored over the creation of new engineered water obstacles because new water features will introduce new maintenance responsibilities and will likely impose negative impacts on a historic property.

Controlled Perimeter — Berms. In locations where effectively engineered berms are suitable in terms of historic land use, they can define a controlled perimeter. However, the addition of shrubs or other ornamental plantings to the berm may not be appropriate. Inappropriate plantings will tend to call attention to non-historic earthworks in a historic landscape. If the location has historically functioned as a lawn with no other vegetation, then planting the berm as a lawn — preferable at a distance from the building — will preserve the appearance of a continuous plane without emphasizing the added non-historic landform. Berms can be used in combination with earthen ditches, using the soil cut from the ditch as fill for the berm.

Controlled Perimeter — Earthen Ditches. Earthen ditches, natural or engineered, are difficult to drive a vehicle through if depth and slope are adequate. Earthen ditches may be well suited for use on historic sites because they are hidden from view at a distance. They can be adjoined with an adjacent berm to hinder vehicle movement, but such a combination may span up to 30 ft, thus requiring substantial space on the site. Because any continuous earthen ditch will

water mark of the water feature is the boundary demarcation (p A-1).

collect rainwater and runoff, this resolution must include suitable drainage provisions.

Controlled Perimeter — Sensor and Surveillance Technologies. These technologies can be used with perimeter barriers to detect and observe perimeter activity. They range from simple optical devices to sophisticated multi-sensor systems. Imaging techniques may include photographic enhancements (e.g., zoom lens and infrared cameras), closed-circuit television, and image intensifiers (e.g., night vision devices). Large-scale blended surveillance approaches similar to those used by the U.S. Customs and Borders Protection Agency may be appropriate for very large or high-value assets. These procedures may include integrated camera-sensor-database systems, unmanned aerial vehicles (UAVs), and trend mapping using geographic information systems (GIS) (CBP 2005). Small components can be concealed under building eaves or inside light fixtures, for example, causing no significant disturbance to the integrity of a historic property (Figure 6). This approach requires effective surveillance line-of-sight corridors that do not have significant impact on historic site features.

Figure 6. On historic properties, it is best to conceal surveillance equipment in building or site features if possible (Webster 2006).

Parking and roadways (B-1.1.2)

Parking zones and roadways may be contributing elements to a historic landscape. For purposes of UFC 4-010-01, any parking zone or roadway is assumed to be a potential route by which a stationary vehicle bomb may be delivered to its intended target. Therefore, utilization and control of parking lots and roadways is usually the key to satisfying the standoff requirements of the UFC.

Table B-1 of UFC 4-010-01 gives the baseline standoff distance assumptions for buildings both inside and outside of a controlled perimeter. It can be seen that a conditional exception to the required standoff is allowed where it is not feasible to implement the full required standoff for existing buildings. The exception is indicated by the column labeled "effective standoff distance." However, the reduced standoff distance is permitted only when additional architectural and structural measures are applied to protect occupants of the affected building.

Because the DoD minimum AT standards for parking and roadways are directly related to building standoff, any undertakings will either affect the vehicle circulation network or a nearby building.

As a preliminary to any AT undertakings in this topical area, it is important to understand that UFC 4-010-01 does not unilaterally require significant alterations of parking or roadways simply because they are located too close to a building. The baseline threat addressed by UFC Standard 1 is a stationary vehicle bomb, so the minimum AT standard for roadways can often be met simply by prohibiting parking or stopping on any part of a roadway within the standoff. To be effective, however, parking prohibitions must be rapidly and vigorously enforced.

In cases where the DoD minimum AT standards cannot be met through roadway parking restrictions, installation personnel may need to analyze the tradeoffs involved in an undertaking on historic vehicle circulation networks versus an undertaking to structurally strengthen a historic building. For historic parking and roadways, the conflicts between AT and historic preservation requirements will generally center on materials, location, scale, spatial relationships, and traditional land use. If parking zones in a historic landscape must be relocated, they should be laid out to conform with historic land use patterns to the greatest extent feasible. For example, it may be preferable to expand an existing parking lot, which main-

tains the historic land use pattern, than to construct a new lot in a historic open space, historic parade ground, or greenbelt.

Resolutions that prevent parking within the standoff are:

Parking and Roadways — Abandon in Place. Closing parking zones or roadways that are character-defining features of a historic site will constitute an undertaking, but it may not have a negative impact that requires mitigation. Low-impact undertakings that meet the minimum AT standards will always be preferred to high-impact modifications. Preserving historic vehicle circulation networks, even in an unused state, is desirable because these components contribute to an understanding of the site. It must be understood, however, that abandoned historic parking and roadways must be minimally maintained to avoid becoming safety hazards to site users and to avoid subsequent findings of adverse affect by neglect under NHPA Section 106.

Parking and Roadways — Close the Street and Parking Areas. This resolution differs from abandoning in place in that it involves some level of redesign. In clusters of historic buildings where the DoD minimum standoffs cannot be achieved, the most effective AT/HP solution may be to close the street to vehicle traffic. Depending on the function of the buildings in the historic cluster, this approach may require that one guard-supervised or automated ACP be included for deliveries, pickups, and emergency vehicle access (Figure 7). This resolution will likely require traffic and parking analyses to understand impacts of redirecting traffic.

Figure 7. In a campus approach, guardhouses can be used to control access to building clusters (Webster 2006).

Parking and Roadways — Demolish Roadways and Parking Lots. Parking or roadway demolition on a historic site will constitute an adverse effect when the affected elements are character-defining features of the site. The undertaking will require mitigation under NHPA Section 106. One possible mitigation is to use a complementary paving material to define where the removed elements historically joined any pavement left in place. However, if the affected pavements were latter-day intrusions on the historic site, removing them will improve the historic character of the site. In any case, traffic and parking analyses will probably be necessary to investigate vehicle circulation implications for the installation. Demolition of functional pavements may create the need for extension of the vehicle circulation network elsewhere on the installation.

Parking and Roadways — New or Relocated Parking and Roadways Off Site. If analyses show a need to replace demolished parking, one option is to construct new replacement parking off site. If the off-site location is quite remote, shuttle services may be

necessary to transport building users to their respective buildings.

Parking and Roadways — New or Relocated Parking and Roadways in Historic Landscape. If encroachment of new parking and roadways onto a previously unpaved portion of a historic landscape is inescapable, consider sustainable alternative paving materials such as permeable engineered pavers that can support the weight of vehicles but allow grass to grow through (e.g., GrassPave2). They produce a paved surface that is not visible from a distance. Permeable pavement materials are well suited for low- to medium-use parking and roadways (e.g., overflow, intermittent, and handicap parking; fire lanes and emergency access roads; and utility and operational access roads). Their long-term performance and durability depends on the use of sufficient subsurface base courses, quality installation, and proper maintenance. Turf-related service requirements are the same as those for lawns (greater use requires more care); snow removal on pervious roadways can best be accomplished with protective skids at the corners of snowplow blades. Where surface parking is not an option, consider underground parking. This strategy keeps parking outside of historic viewsheds. Since this strategy involves substantial excavation, it may invoke SOI Standard 8 on archeological resources. In cases where visible historically incompatible paving materials (e.g., asphalt or concrete) are used to construct new parking and roadways within a historic site, negative impacts can be mitigated with HABS/HAER/HALS documentation.

Apart from parking and roadway location, the level and nature of building occupancy largely determines standoff distance requirements. Every building, and sometimes a portion of a building, falls into a specific occupancy category under the UFC — namely *billeting*, *primary gathering*, or *inhabited*. These categories, based primarily on type and density of occupancy, comprise an additional factor in determining the necessary standoff.

UFC 4-010-01 defines an inhabited building as one that is routinely occupied by 11 or more DoD personnel with a population density greater than one person per 40 gross square meters (430 gross square feet). Note, however, that there are explicit exclusions and caveats specified in the definition, so planning and project teams must read and understand the complete definition provided in UFC 4-010-01, Appendix A. Additionally, UFC 4-010-01 includes definitions for buildings with high-density occupancy (i.e., billeting and primary gathering, which also are found in UFC Appendix A), and those facilities require larger standoffs than a nominal inhabited building.

The required level of protection for existing inhabited buildings is the same as for new inhabited buildings, but the constraints on how to meet the standards are less rigid for existing buildings. The UFC prohibits constructing a new inhabited building with less than the required baseline standoff of 25 m (82 ft). Existing inhabited buildings, however, may have as little as 10 m (33 ft) of standoff if protective construction methods are used to provide the required level of protection for building occupants. For many existing inhabited buildings in densely developed installation areas, there will be no practical way to provide the required standoff for conventional construction. In that case installation personnel may have to choose between either a structural undertaking on a historic building or imposing access controls on adjacent historic parking and roadways. Alternatives for meeting the minimum AT standards may become even more constrained when applying the standards to billeting or primary gathering buildings, which require a minimum standoff distance of 25 m (82 ft) without a controlled perimeter. This requirement will result in a larger impact on parking areas for buildings that need to accommodate the most vehicles.

For historic inhabited buildings where the required standoff for conventional construction is not available, structural and architectural strengthening will often not be practical without creating an adverse impact. In such cases UFC 4-010-01 permits the use of vehicle access control infrastructure to create a separation between building occupants and potential stationary vehicle bombs. This approach is suitable for parking or roadways located within the 25 m (82 ft) baseline standoff zone.

UFC 4-010-01 allows parking as close as 10 m (33 ft) to existing inhabited buildings if effective parking restrictions are established (B-1.1.2.2.1).*

* Under the heading of Controlled Parking Areas, UFC 4-010-01 addresses three subtopics: Parking

These vehicle access restrictions need only incorporate some sort of ACP; no perimeter barrier is needed to satisfy UFC requirements. It is assumed that building occupants will judge vehicles located outside of designated parking areas to be suspicious and thus likely to report vehicle access violations. The addition of intermittent curbing, rough rock outcrops, and soft, loose gravel beds near ACPs can serve as reasonably effective (although not insurmountable) deterrents to circumventing ACPs in the manner illustrated in Figure 8.

Figure 8. Roadway edge treatments near ACPs can deter their misuse.

As with any AT/HP resolution, the introduction of non-historic site fixtures into the historic landscape can degrade the integrity of a historic landscape. Any addition that requires substantial earthworks may be subject to SOI Standard 8 on preserving archeological resources. Resolutions that address vehicle access control are:

> **Access Control — Barrier Gates with Card Readers**. Vehicle barrier gates activated by automated card readers and similar authorized devices may be used to establish ACPs for parking control. For this and any ACP controlled by technology, one rap-

Within a Controlled Perimeter (B-1.1.2.2.1.1), Parking Without a Controlled Perimeter (B-1.1.2.2.1.2), and Alternate Situations (B-1.1.2.2.1.3). Those subsections are narrative descriptions of information provided in UFC Table B-1 and are not discussed here.

idly emerging technology to consider is radio frequency identification (RFID) tags, which could be incorporated into installation parking stickers. RFID emitters or scanners can be unobtrusive even though the control gate and keypad station might be less so. Note that barrier gates are best located in the least noticeable location (for HP compliance) if they are added to a property.

Access Control — Manned Screening. Manned guard stations may be used to check IDs, thus limiting access into the standoff to only authorized personnel. Guard stations typically include some sort of shelter for the guard and an automated gate to deny entry. Infrastructure may also include turnaround areas for rejected vehicles. Elaborate multi-component systems are more likely to disrupt the historic landscape, so simple stations are preferred. Manned stations offer the advantage of tiered screening, which provides access to delivery and emergency vehicles while enforcing security (Figure 9). The disadvantage of manned stations is the labor cost.

Figure 9. Deliveries must be screened or made to a centralized facility away from inhabited buildings (ERDC-CERL 2004).

Access Control — Directional Traffic Controller. This device is commonly referred to as a 'tire shredder' and is frequently found in rental car lots to

control their automotive inventory. For purposes of UFC compliance, one or more directional traffic controllers can be used to force traffic in a specified direction across a site. Since they allow unimpeded passage in one direction, they must be used in conjunction with a screening ACP. This device offers the advantage of a single point of site entry and multiple egress routes. Since the controller is embedded in the roadway, it presents few AT/HP compliance conflicts.

Access Control — Mechanical Ditches and Popup Barriers. One emerging access control technology is an engineered trench of sufficient depth and slope covered by a drivable plate that can be electronically or manually retracted during a security threat to drop the violating vehicle. They have an advantage over popup barriers in that they are largely powered by gravity. Mechanical ditches could arguably work as an ACP obstacle even without a contextual precedent on a historical site because, like earthen ditches, they are visually inconspicuous at a distance. Popup barriers create a vehicle obstruction on demand by extending a sturdy protrusion above grade. Because they are stowed below grade and powered by hydraulics, their functionality may be affected by ice, snow, corrosion, and extreme cold. When stowed, pop-up barriers are out of view and so pose no significant AT/HP problem at historic sites.

Access Control — Vehicle Net Barriers. These systems are increasingly used as high-volume traffic control devices at installation front gates. They function much like the arrestor wires on an aircraft carrier and deploy in about 1 second. These barriers can be used across several lanes. The net is fabricated of high-strength cables and set in rubber pads recessed into the roadway surface. The systems are reusable after multiple vehicle impacts and take about 30 minutes to reset. Because the net is recessed into the pavement, historic preservation concerns will focus on

above-grade components that flank the roadway, including the net-lifting arms, motors, energy-absorbing pistons, anchor stanchions, and control boxes (Figure 10). Painted aluminum and manufactured stone finishes are available to enhance the aesthetics of visible components (GRAB 2006).

Figure 10. Above-grade components of vehicle net barriers may create a visual challenge when installed a historic landscape (Universal 2005).

Access Control — Designated Visitor Parking Areas. Visitor populations may be assumed to pose a greater security risk than installation residents and employees. Therefore, it may be desirable to designate and locate all visitor parking outside the applicable standoff zone. A more restrictive visitor parking policy can improve the possibility of detecting suspicious activities. Where feasible, a shuttle service running between designated visitor parking and the building may be desirable.

Parking zones along roadways are subject to the same standoff considerations as dedicated parking lots (B-1.1.2.2.2). Therefore, parking must be prohibited along any portion of a roadway that is located inside the prescribed standoff zone of existing buildings. The most likely historic preservation conflict related to roadway parking restrictions would be a case where there is a need to compensate for the loss of roadway parking by

creating a new parking zone on a historic site. Resolutions that prevent parking along roadways include:

Roadway Parking Prohibition — Relocation of Parking from Roadways. This strategy involves moving parking spaces alongside roadways from the standoff zone to an offsite location. One way to deter parking along streets is to reduce the width of the lanes (Figure 11). For detailed suggestions see *New or Relocated Parking and Roadways in Historic Landscape*, p 29.

Figure 11. Reduced pavement widths can deter parking along roadways within the standoff (ERDC-CERL 2004).

Roadway Parking Prohibition — Signage, Markings, and Enforcement. This operational approach designates streets as no-parking zones by prohibiting vehicles from parking or standing within the building standoff. Signage and pavement markings should be conspicuous without degrading the historic feel of the site. The size, color, and anchorage of signage and markings will generally determine site compatibility. A critical aspect of no-parking zones is rapid, effective enforcement, usually by the installation Provost Marshal or Antiterrorism Officer with authorization by the Installation Commander. An agreement covering enforcement actions should be documented and on file at the installation to ensure UFC compliance. A disadvantage of this resolution is

that enforcement may increase installation operational costs.*

UFC section B-1.1.2.2.3, *Parking for Family Housing*, applies to buildings of 13 or more housing units served by access-controlled parking. In these cases parking within the standoff area is allowed as long as parking spaces are assigned to specific units or individuals. However, the UFC prohibits the addition of any new parking stalls closer to the housing than the existing spaces. This standard will only have an HP impact when parking is added to historic family housing with 13 or more units per building. Because family housing with fewer than 13 units per building is exempt from all provisions of the UFC, parking-related impacts will not be a problem for historic family housing incorporating 1 – 12 units.

Where affected housing and its associated parking lack a controlled perimeter, access to parking areas may be controlled using methods discussed on page 31. For example, barrier gates with card readers meet the intent of the UFC access control definition. Family housing has not previously been a target of terrorist activity. When housing occupancy is high and most of the parking stalls are full, it is assumed that residents will be aware of unauthorized use of their parking spaces. When the parking lot is mostly empty, it may be reasonable to assume that the buildings are a less attractive target because most residents are not present.† Resolutions addressing parking in larger family housing areas include the following:

Family Housing Parking — New Parking in Large Family Housing Areas. As stated previously, it is usually preferable to expand an existing parking lot, which maintains the historic land use, than to construct a new lot in a historic open space. For detailed suggestions see *New or Relocated Parking and Roadways in Historic Landscape*, p 29.

Family Housing Parking — Assign Parking Spaces. This resolution addresses the signage and markings necessary to assign parking spaces. Al-

* This AT/HP resolution is also applicable to UFC Standard 3 that prohibits parking in drive-up/drop-off areas.

† The UFC does not extend the concept of reserved parking to non-housing buildings because it is assumed that occupants of those buildings would be less aware of unauthorized use.

> though the spaces are assigned to specific occupants or housing units, the pavement markings must not identify the individual by name, rank, or housing unit number. As with the no-parking signage and markings discussed above, these elements should be conspicuous but unobtrusive in historic areas; size, color, and anchorage will generally determine historic site compatibility.

Parking of emergency, command, and operations support vehicles (B-1.1.3)

UFC 4-010-01 paragraph B-1.1.3 addresses parking and access rules for the subject vehicles, not infrastructure modifications for the buildings served by those vehicles. For purposes of the UFC it is assumed that these vehicles are stored and serviced in restricted-access areas, including vehicle bays inside buildings, and remain under the control of authorized personnel at all times. Therefore, these types of vehicles are exempt from most parking restrictions stated in UFC 4-010-01. However, in no case may such vehicles be parked closer to a building than the distance prescribed for unobstructed space in UFC Standard 2 because they could be used to conceal a bomb inside the standoff.

Because this UFC provision addresses vehicles rather than real property, no AT/HP conflicts are anticipated. In order to meet this DoD minimum standard, however, installations may need to heighten access restrictions and physical security for facilities where emergency, command, and operations support vehicles are parked and serviced. The design and operation of restricted areas is a physical security issue that falls beyond the scope of this report. For more information, refer to Military Handbook (MIL-HDBK) 1013/1A.

Parking of vehicles undergoing maintenance (B-1.1.4)

This paragraph of the UFC provides a parking exemption for vehicles that must be serviced inside a facility that encloses inhabited space. It requires no facility upgrades and therefore presents no AT/HP conflicts.

Adjacent existing buildings (B-1.1.5)

Existing inhabited buildings are exempt from UFC 4-010-01 if they are not being modified for purposes of major capital investment, conversion in use, or glazing replacement (see UFC 4-010-01 paragraph 1-6.2 and subsections). UFC paragraph B-1.1.5 addresses spatial relationships between construction projects and existing inhabited buildings currently exempt from the minimum AT standards. Wherever feasible, parking, roadways, and trash containers included in the construction project should be separated from existing inhabited buildings by the amount of standoff prescribed in UFC Table B-1. When that amount of standoff is not available, then the new parking, roadways, and trash containers must provide no less standoff than already exists for the adjacent existing building. If that existing building is on or eligible for the National Register, refer to *Minimum Standoff Distances* on page 12 and *Parking and Roadways* on page 26 for suggested resolutions to potential AT/HP conflicts.

Parking and roadway projects (B-1.1.6)

The guidance provided in this paragraph of UFC Standard 1 is essentially the same as provided in paragraph B-1.1.5 above, but it expressly refers to parking and roadway construction projects that are not directly associated with a building renovation or other modification that would require compliance with the UFC standards. The objective is to avoid incidental encroachment on standoff zones already provided for existing inhabited buildings and, preferably, to provide the full prescribed standoff distances wherever feasible. This standard will not tend to impact a historic landscape unless a contributing circulation pattern is changed or additional parking is added to a historic landscape. In cases where a conflict arises, refer to the applicable discussions of UFC paragraph B-1.1.2, *Parking and Roadways*, on page 26.* †

* Additional parking requirements are set forth in Standard 5 (B-1.5), which addresses added implications for delivering vehicle bombs by prohibiting parking beneath or on rooftops of inhabited buildings. Where confined sites make such parking unavoidable, additional access control (B-1.5.1), structural hardening (B-1.5.2), and progressive collapse (B-1.5.3) provisions apply. For access control-related resolutions to potential AT/HP conflicts, see page 31.

† Additional roadway requirements are set forth in UFC Standard 4 (B-1.4). Where access roads are necessary for the operation of a building (e.g., fire stations), this standard requires that access control measures be implemented to prohibit unauthorized vehicles from using access roads within the applicable standoff distances. For resolutions to potential AT/HP conflicts related to control of access roads, see page 31.

Trash containers (B-1.1.7)

Because a terrorist may use a trash container to conceal a bomb, this portion of UFC Standard 1 requires that trash containers and their enclosures be separated from buildings by the amount of standoff required in UFC Table B-1. Where standoff is not available, trash container enclosures may be located closer to the building if they are (1) hardened to minimize blast effects on the building and (2) secured with grids or openings no larger than 150 mm (6 in.) in any dimension to prevent the deposit of large explosive charges. In no instance may trash containers and their enclosures violate minimum unobstructed space requirements around buildings (see UFC 4-010-01 Section B-1.2, Standard 2).

UFC paragraph B-1.1.7 addresses the blast-hardening of existing trash container enclosures, but it does not prescribe or discuss the use of so-called hardened trash receptacles that are appearing on the market. This distinction is significant because 'blast-resistant' trash receptacles are being aggressively marketed even though most advertised products do not come close to resisting the impulse energy of even the smaller explosive weight assumed in the UFC. The hardening of trash container enclosures is permissible if the enclosure design meets performance requirements for explosive weight II (UFC Table B-1). Resolutions that address trash containers and their enclosures are as follows:

> **Trash Containers — Clear the Standoff Area**. Although special hardening and security measures may be applied to ease restrictions on trash container placement, the simplest and least costly way to comply with UFC paragraph B-1.1.7 is to remove all trash containers from the standoff zone. Trash containers are typically contemporary additions to a site and not historic in any sense, so removing them from the standoff may favorably impact a historic landscape (Figure 12). Small trash receptacles can be moved inside the building. Larger trash containers can be moved to parking areas outside the standoff.

Figure 12. Trash containers and smoking shelters are contemporary additions that detract from historic landscapes while providing bomb concealment opportunities (ERDC-CERL 2004).

Trash Containers — Develop Standards-Compliant Enclosure. If there is no way to avoid locating a trash container inside the prescribed building standoff, container enclosures should be designed or retrofitted to resist the blast loads associated with explosive weight II and comply with SOI Rehabilitation Standards 9 and 10 addressing compatible and reversible new additions. Because most 'hardened' trash receptacles currently on the market provide very limited blast resistance, explosive weight resistance must be verified before purchase.

2 Structural Design (UFC 4-010-01, B-2)

Structural strengthening and historic preservation conflicts

For purposes of this report the term *structural system* is defined as that portion of a building that carries or resists the design loads such as gravity, wind, ground motion, and dynamic loading resulting from activities of the building's occupants. Blast loads traditionally have not been a design consideration in conventional construction, but the structural system can be critical to the life and safety of building occupants depending on how it performs in a blast.

Structural rehabilitation challenges

Rehabilitating any building to meet UFC 4-010-01 structural design standards is often the most disruptive and expensive task associated with AT compliance for conventional construction. Difficulties are inherent because the structural system is integral to the building; all other building systems are dependent on or constructed around the structural system. Apart from issues of cost or historic preservation compliance, the main challenges related to AT structural rehabilitation are

- construction-related disruption of the building's mission
- access to the load-carrying components that need to be strengthened or replaced
- safe support of all design loads during construction
- effects of new dead loads, introduced through the addition of reinforcement mass, on the structural performance of all other parts of the building
- potential negative impacts of nontraditional rehabilitation technologies, such as offgassing or changes to ventilation loads caused by application of spray-on polymeric membrane materials.

All these issues must be addressed when rehabilitating a historic building.

Typical preservation-related issues

On a military installation, almost all historic buildings were built around conventional structural systems that were industry-accepted at the time of construction. The main examples that are impacted by UFC 4-010-01 are

unreinforced masonry (concrete block and brick), lightly reinforced concrete, and structural steel framing. In addition to the engineering issues noted above, AT structural rehabilitation has three general categories of impact on historic preservation:

- *Destructive activities.* Some demolition or deconstruction may be required to gain access to structural systems or install retrofit components. These activities may lead to the alteration or removal of character-defining features, materials, finishes, craftsmanship, etc., in conflict with SOI Standards 2 and 5 on preserving historic character and craftsmanship. Also, these changes may be impractical to reverse as required by SOI Standard 10.
- *Visual incompatibilities.* Modern strengthening technologies may be visually incongruous with historic construction aesthetics and design, raising potential conflicts with SOI Standards 2, 5, 6 (repair or match features), and 9 (compatible new additions).
- *Unknown long-term impacts on historic building materials.* Innovative rehabilitation technologies may cause or accelerate damage such as corrosion, mold, or acid-related degradation of concrete or stone. These problems may impact compliance with SOI Standard 7 (use of gentle, appropriate treatments). Even reversible rehabilitation techniques may have a long-term adverse effect on the historic fabric of the subject building if not properly installed and maintained.

Before pursuing a structural rehabilitation strategy for AT compliance, project teams should examine all less-invasive alternatives for meeting the AT standards, including site planning or operational alternatives that increase standoff, limit stationary vehicle proximity, facility utilization, and so on. Depending on the nature of a property's historic significance or other site-specific constraints, however, strategies that focus on structural rehabilitation may be the best life-cycle cost-effective alternative for complying with both the SOI rehabilitation standards and UFC 4-010-01.

Preliminary considerations for AT/HP project teams

In all cases, before any AT upgrades are performed to the structural components of a building, a comprehensive review of security considerations must be performed. Site design changes (Appendix B-1, UFC 4-010-01), where feasible, may be the best strategy for providing the necessary level of protection. In many cases, achieving adequate standoff distances might limit the need for invasive building modifications. Altering security regi-

mens and configurations, securing perimeters, moving parking lots, etc., can often reduce the need for expensive structural undertakings. Additionally, if there are inherent vulnerabilities within buildings, it is conceivable that altering building use can reduce structural upgrade requirements. For example, making a building portion low occupancy or converting this space to storage or electrical-mechanical use may eliminate the need for some building alterations. It is typically most cost-effective to exhaust all other strategies before resorting to invasive building modifications. If these strategies will not satisfy the requirements of UFC 4-010-01 and the project team must consider extensive rehabilitation of the structural system, the building needs to be analyzed for its specific strengths and weaknesses in terms of blast loading performance. Once the structural weaknesses have been identified, the best course of action will depend on (1) feasibility of structural rehabilitation strategies for a given building, (2) the impacts of strategies on other building-related mandates (e.g., construction, life-safety, and seismic codes; handicap accessibility; NHPA; etc.), and (3) costs and available resources.

In some cases structural rehabilitation of a building may be the best strategy for providing the necessary level of protection with the least overall impact on a property's historic integrity. It is likely, however, that any feasible rehabilitation strategy will carry the potential to adversely affect historic properties (36 CFR 800.5). Nevertheless, structural modifications offer potential opportunities in terms of resolving antiterrorism/historic preservation (AT/HP) compliance issues because the structural system is typically concealed from or not obvious to building users. Therefore, a well executed structural rehabilitation may have very little impact on appearance or occupant experience as long as visible materials and details are treated according to the SOI rehabilitation standards.

Table 1 – Table 4 provide an overview of the structural rehabilitation methods appropriate for compliance with UFC 4-010-01 Standards 6 – 9, each of which is discussed at some length in this chapter. Note that each method specifies one of three forms of attachment — adhered, bonded, or mechanical. An *adhered* application is a material that is affixed to a structural member with an adhesive layer; a *bonded* application is a material that holds fast directly to a substrate without an intermediate adhesive; and a *mechanically attached* application is physically interlocked with the substrate using bolts or other hardware. The method of attachment is important because it has implications for NHPA compliance, specifically with

respect to the SOI rehabilitation standards. Considering the level of performance required for an AT structural rehabilitation technology, it should be assumed that adhered and bonded structural rehabilitation applications are irreversible (see SOI Standard 10) unless materials analysis or testing data can verify that the application may effectively be reversed without harm to the substrate. Also with adhered and bonded applications, chemical reactivity with the substrate must be considered in accordance with SOI Standard 7. Common forms of mechanical attachment such as through-bolting are generally reversible, but because they involve some destruction of historic material, they may not comply with SOI Standard 7. In cases where an AT rehabilitation technology is determined to be irreversible or to damage historic materials, mitigation activities probably will be required.

The methods presented in Table 1 apply mainly to progressive collapse avoidance (UFC 4-010-01, Standard 6) because they add strength or continuity to the structural system. The resolutions, which relate to columns and their connections, are discussed in detail under "Columns and walls (B-2.1.1)". These rehabilitation methods also mitigate hazards addressed in UFC Standard 8.

Table 1. Structural rehabilitation methods for columns and their connections.

Rehabilitation Method	Attachment	Attributes	UFC Standards
Encase Light Steel Members	Bonded	Strength, resilience	6, 8
RC Column Confinement Using Steel Jacket	Mechanical, adhered	Strength, column confinement	6, 8
RC Column Confinement Using CFRP Hoop Wrap	Adhered	Strength, column confinement	6, 8
Composite Flexure Strips for RC columns	Adhered	Strength	6
Enhanced Connections for Structural Steel Frames	Mechanical	Continuity, redundancy	6
Enhanced RC Structural Connections	Bonded	Continuity	6

The methods listed in Table 2 apply mainly to progressive collapse avoidance (UFC Standard 6) because they add strength or redundancy to the structural system. Although these methods may be used for the retrofit of infill wall systems, they are typically applied to load-bearing unreinforced or under-reinforced masonry (URM) walls. Further discussion may be

found under “Columns and walls (B-2.1.1)” and “Exterior member removal (B-2.1.2)”.

Table 2. Structural rehabilitation methods for load-bearing walls.

Rehabilitation Method	Infill	Load Bearing	Attachment	Attributes	UFC Standards
Steel Column and Plate Reinforcement	Yes	Yes	Mechanical	Redundancy	6
Aramid Laminate Reinforcement	Yes	Yes	Adhered	Strength, stiffness	6
Outrigger Load-Bearing System	Yes	Yes	Mechanical	Redundancy	6
Cable Support System	Yes	Yes	Mechanical	Redundancy	6

The rehabilitation methods listed in Table 3 relate to avoiding a specific instance of progressive collapse (UFC Standard 6) that involves failure of floor slabs. Additional detail and discussion may be found under “Floors (B-2.1.3)”. These rehabilitation methods also address hazards presented in UFC Standard 8, as described in the text.

Table 3. Rehabilitation methods that enhance structural floor systems.

Rehabilitation Method	Attachment	Attributes	UFC Standards
CFRP Composite Mats	Adhered	Tension reinforcement, strength	6, 8
CFRP Composite Rods	Mechanical, adhered	Tension reinforcement, strength	6, 8

The structural retrofit methods summarized in Table 4 aim to mitigate situations that would lead to local collapse or disintegration of an exterior masonry wall panel, and if load bearing, to potential loss of support of the load-bearing wall. For infill wall panels, these techniques can be used to prevent the masonry wall materials from becoming injury-producing debris. These rehabilitation methods are addressed by UFC Standard 9. Those methods that enhance structural strength or redundancy provide secondary benefits for load-bearing URM walls by also protecting against progressive collapse (UFC Standard 6).

Table 4. Structural rehabilitation methods that protect interior spaces from wall fragmentation.

Rehabilitation Method	Infill	Load Bearing	Attachment	Attributes	UFC Standards
Retrofitted Reinforcement by Means of Coring	Yes	Yes	Bonded, mechanical	Ductility, reinforcement, strength	6, 9
Reinforced Concrete Backing Wall	Yes	Yes	Mechanical and/or bonded	Debris containment, redundancy	6, 9
Reinforced Shotcrete Skin	Yes	Yes	Bonded	Debris containment, redundancy	6, 9
Soft Hardening (e.g., Durisol® Block)	Yes	Yes	Mechanical	Debris containment, energy absorption, redundancy	6, 9
Spray on Polymer Materials	Yes	No[1]	Bonded	Energy absorption, debris containment	9
Geotextile Fabric Catcher System	Yes	No[1]	Mechanical or adhered	Debris containment	9
Sheet Steel Wall Catcher System	Yes	No[1]	Mechanical and adhered	Debris containment	9
GFRP Fabric	Yes	Yes	Adhered	Strength, debris containment, energy absorption	6, 9
Steel Stud Partition	Yes	Yes	Mechanical	Debris containment, redundancy	6, 9
Steel Columns and Catch System	Yes	Yes	Mechanical and adhered/bonded	Redundancy, debris containment	6, 9

1 These retrofits do not add measurable strength or redundancy to the structural system, so secondary rehabilitation measures must be taken if these methods are to be applied to walls that are designed to carry gravity loads.

Some of the rehabilitation methods presented in this document may have very narrow applicability due to life-cycle cost issues, replacement cost threshold triggers, or irreversible negative impact on the building's historic integrity. Those methods are presented in the interest of providing the widest range of alternatives for AT/HP project teams. It should be noted that every method may come with its own set of caveats, however. For example, certain advantageous applications may depend critically on highly skilled installation for proper response to blast loads. A significant issue with bonded or adhered materials, to cite another example, is that the application may be practically irreversible, and as such may require the

expense and effort of additional mitigation (e.g., HABS/HAER* documentation) to ensure NHPA compliance.

The main factors that may influence the effectiveness of specific structural upgrades (especially on exterior walls) are strength and condition of the existing historic façade, overall envelope airtightness, and geographic location of the property. Some structural rehabilitation methods may create historic materials issues related to moisture permeability of the building envelope and freeze/thaw cycling. Consequently, some of these measures (including the reversible ones) may have adverse effects on aging building materials and long-term building performance. Little data are available to assess such impacts, so the most sensible strategy is to ensure that AT/HP structural rehabilitation projects are executed with good planning, superior construction practices, and a long-term commitment to effective building management. Regular inspections, preventive maintenance, and timely repairs are important factors in ensuring a building provides an adequate and ongoing level of protection.

Blast loading issues for conventional construction systems

Before any rehabilitation project, security personnel should conduct a threat analysis (UFC 4-010-01 para 1-5.2) to determine the required level of protection to be afforded to building occupants. The design blast loads are then set to provide the needed level of protection.

Quantifying terrorist blast loads for structural design

Quantifying conventional building load conditions is straightforward given a specific construction type and geographic location. It is understood that a building in Chicago should be designed for a greater snow load than the same building in Miami, for example, or that seismic ground motion will be a more important design consideration in California than in Wisconsin. Designing for blast loads has not been part of standard design practice for conventional construction, however. The loads created by a bomb blast are difficult to quantify because of the range of variables that may apply, such as effective standoff distance, ease of intruder access, etc. Despite the visibility and impact of the September 11 terrorist attacks, large-scale attacks remain so rare that there is no statistically significant body of data that can be used to predict blast size, location, or specific site characteristics that

* Historic American Buildings Survey/Historic American Engineering Record.

constitute a likely target. This lack of data has been identified as a significant reason for the emergence of various overly simplistic approaches to designing against blast effects (Houghton and Karns 2001).

Technology performance validation

The application of blast design standards to a large number of conventionally-constructed existing buildings is a relatively new requirement that has resulted in the development of many new advanced materials and building technologies. These technologies are now being aggressively marketed, but often without having been independently tested against established performance standards. AT/HP project teams are responsible for verifying that innovative protective technologies under consideration comply with the requirements of UFC 4-010-01.

In addition to their performance under blast loading, another uncertainty associated with innovative materials is how they perform in composite with aging conventional building materials. Where new materials are integrated with conventional ones it may be difficult to predict how the new systems will perform in combination with the materials in place.

Another complication is that an explosion imposes multiple destructive forces — thermal, impact, and blast (TIB) loads — that produce unique structural responses unrelated to traditional gravity, wind, or seismic loads (Crawford 2002). There are limitations on how accurately analytical modeling can predict the effects of such complex, non-conventional structural loading, and these limitations make it difficult to validate in advance how effective a structural rehabilitation method will be.*

Differences between blast and seismic loading

Results of analytical tests sponsored by the Federal Emergency Management Agency (FEMA) indicate that various seismic retrofit methods may provide significant progressive collapse prevention benefits in a blast environment (FEMA 439A). However, it must be understood that seismic strengthening is not the equivalent of blast-resistant design. An earthquake generally applies stresses throughout an entire structure, but a bomb blast imposes a high-impulse, high-intensity pressure load over a

* It should be noted that additional design, analytical time, and possibly testing resources will be required before any unvalidated technologies can be applied with confidence for any given inhabited facility, historic or otherwise.

localized portion of the structure. A bomb blast will load a structure approximately 1,000 times faster than will an earthquake (Krauthammer 1999), and the blast load is of much shorter duration. Also, a blast impulse propagates spherically (hemispherically when the bomb explodes near ground level), so a bomb burst will create significant uplift loads on building diaphragms located above the explosive charge. Seismic strengthening rarely addresses this type of uplift loading.

Despite those differences, seismic design can provide two benefits of high importance in blast-resistant design: ductile (i.e., non-brittle) failure modes and structural redundancy for the redistribution of gravity loads around a failed support element (Smilowitz 2003). Thus, some aspects of seismic design are directly applicable to the AT structural design standards, as implied by FEMA 439A. Conversely, AT retrofits that add mass to a structural system may be a liability in terms of seismic performance. In areas of high seismicity, a structural analysis will be required in which both types of loading are applied to a structure to ensure that any AT modifications will not make the structure more vulnerable to seismic damage.

Blast loading of wood frame construction

World War II temporary structures were commonly built of wood frames and rigid wood walls. According to UFC paragraph 2-4.11, it is assumed that most of these structures cannot be modified to protect occupants from blast effects, and therefore site planning measures must be implemented to achieve the required level of protection. All of the UFC standards specifically addressing temporary structures pertain to providing standoff through site planning (UFC paragraph D-1).

Progressive collapse avoidance (UFC Standard 6, B-2.1)

General considerations

Progressive collapse creates a high probability of mass casualties in densely occupied high-rise buildings. UFC Standard 6 applies to buildings of three or more stories. Basements are considered stories if they have one or more exposed walls. Progressive collapse was the primary cause of death in the 1995 bombing of the Murrah Federal Building in Oklahoma City, and many incidents are documented in which survivors of an initial bomb blast subsequently die in a catastrophic progressive collapse (Ward

2004). For purposes of the DoD minimum AT standards, progressive collapse is defined as

> a chain-reaction failure of building members to an extent disproportionate to the original localized damage. Such damage may result in upper floors of a building collapsing onto lower floors (UFC 4-010-01, p A-4).

For the most current available guidance on progressive collapse, engineers on the AT/HP project team are referred to American Society of Civil Engineers (ASCE) 7-02, *Minimum Design Loads for Buildings and Other Structures* (ASCE 2002), which supersedes the ASCE publication referenced in the UFC. UFC 4-023-03, *Design of Buildings to Resist Progressive Collapse* (January 2005), is an additional resource, but it focuses on new construction.

Progressive collapse is resisted through the purposeful design of structural continuity that provides redundant gravity load paths to maintain support when a principal structural member is lost. An important aspect of such designs is ductile failure modes that prevent ultimate catastrophic failure and provide residual load-carrying capacity. If a column is destroyed in a bomb blast, for example, a progressive collapse-resisting design would transfer the upper-story gravity loads around the missing element to adjacent elements capable of carrying additional loads (whether undamaged or partially damaged). This type of design is seen not as a way to prevent structural damage but to prevent the level of structural collapse and casualties from grossly exceeding the magnitude of the blast (Ward 2004, Crawford 2002).

Life-safety and liability issues are always important considerations in major structural modification projects. Assessment of collapse risk, occupant safety, and structural performance in a blast environment are highly technical tasks. A valid investigation of these issues depends largely on the specialized expertise of structural engineers who are experienced in the use of complex analytical and modeling tools. There are no off-the-shelf or "turnkey" approaches to progressive collapse re-engineering. Every structural solution must be engineered specifically for the baseline threat and required level of protection. Even if two buildings are identical, site-specific factors such as available standoff may create the need for different treatments.

Much basic and applied research related to structural strengthening systems is now under way, and the state of the art advances continually. In general, there are three alternative approaches to designing structures to reduce susceptibility to progressive collapse:

- redundancy or alternate load paths
- local resistance
- interconnection (continuity) of framing elements.

A variety of different engineering approaches may be appropriate for consideration by AT/HP project teams and their engineering personnel.

Characteristics of structural systems found in historic buildings

Structural steel frames

A steel frame structure with a lateral support system capable of resisting the wind and seismic loads specified in building design codes will generally be able to resist a moderate blast without unacceptable instability or collapse. However, historic structural steel buildings with outdated or undersized member designs, or with weathering or aging of structural components or connections, may be susceptible to catastrophic collapse.

Structural steel frame construction has two specific vulnerabilities to a blast: (1) the webs of I-beams and similar sections are susceptible to buckling, which can substantially reduce member strength, and (2) the welds connecting structural elements may degrade or fail upon exposure to the intensive heat of the initial blast (Sunshine, Swanson, and Swedock not dated).

Explosive charges detonated close to structural members can cause extreme local damage, including complete loss of load-carrying capacity in individual columns, girders, and slabs. Consequently, blast-resistant retrofits for steel frame structures typically focus on reinforcing vulnerable elements such as ground-level columns. Sufficient toughness (i.e., strength and ductility) must be added to avoid loss of load-carrying capacity, and the entire structural system must be capable of arresting a collapse initiated by extreme local damage to such elements (Hamburger and Whittaker 2004). An acceptable level of toughness may be achieved by encasing critical steel columns with a liberal amount of concrete or epoxy, which adds mass to the system and protects the steel sections.

Although standard welded connections (Figure 13) are sufficient and time-tested in structural steel frame construction intended to resist normal gravity and wind loads, they are not well suited to resist blast loads or progressive collapse. The instantaneous removal of a column will tend to produce severe plastic deformation in the column's *panel zone* (i.e., the portion of column web within the boundaries of the girder connection) and result in ultimate failure. The standard connection for this type of construction consists only of a weld that joins each girder's flanges directly to the column flange, and these girder-to-column connections can fail under blast loads. Without the column web to maintain girder-to-girder continuity, no residual positive support is maintained for the horizontal members on opposite sides of the failed column, and this in turn leads to progressive floor collapse (Houghton and Karns 2001).

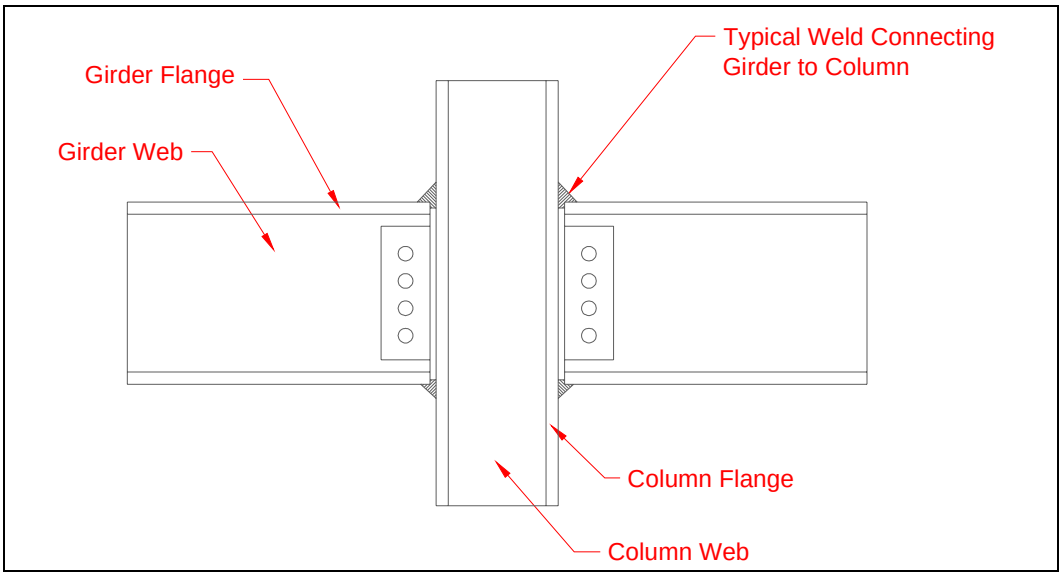

Figure 13. Conventional welded structural steel frame beam/column connection.

Observations of damage sustained by steel frame structures in recent earthquakes indicate that, contrary to intended performance, premature brittle fractures initiate within girder/column connections at lower-than-expected strains. The observed seismic failure phenomena also have been noted in other types of steel frames and frames designed for low seismicity because this type of brittle behavior is inherent in traditional connection technology. It can be inferred, then, that structural steel frames subjected to blast loads are susceptible to the same types of connection failure they have exhibited in seismic loading (Houghton and Karns 2001). An enhanced steel connection can add redundancy to the system by providing for girder-to-girder continuity after loss of an attached column.

Reinforced concrete frames

Blast loading issues for reinforced concrete (RC) frames relate primarily to the properties and performance of the gravity load-carrying columns. A typical RC column is constructed of longitudinal steel rods or bars (i.e., *rebar*), confining steel stirrups (i.e., loops of rebar encircling the longitudinal steel), and poured concrete. Figure 14 illustrates a representative cross-section of an RC column.

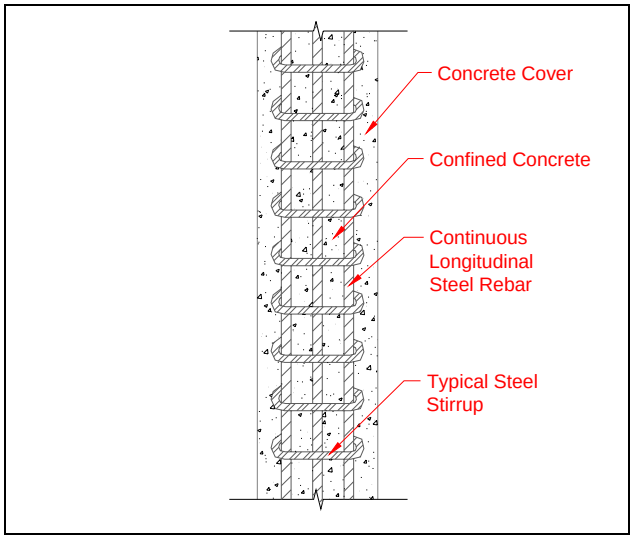

Figure 14. Components of a reinforced concrete column.

When subjected to the force of a blast impulse, a typical RC column may lack sufficient confinement to develop its full *plastic moment* (i.e., the strength required to allow a ductile failure mode instead of a sudden, brittle fracture). This limitation is critical in a blast or any other loading environment sufficient to initiate buckling (Figure 15). The confinement of RC columns using various wrapping techniques can transform the member's failure mode from brittle to ductile, providing an effective technique for retrofitting RC structures to resist progressive collapse after a bomb blast (Crawford 2002).

Figure 15. Buckling of an unwrapped reinforced concrete column (Crawford, Malvar, and Morrill 2001).

When a blast originates in close proximity to an RC column, that column segment typically fragments and then detaches from the floor slab. The intent of wrapping the exposed column is to hold (i.e., confine) the concrete rubble together sufficiently to continue carrying gravity loads (Smilowitz 2003). Wrapping the column with a carbon fiber reinforced polymer (CFRP) fabric or a steel jacket also transforms the column's brittle response to a highly ductile one, effectively increasing its load-carrying capacity after a failure has initiated. The reason for these performance enhancements is that the strength and ductility of typical concrete markedly increases with confinement. A properly specified and executed wrapping technique can increase the column's energy-absorbing capacity by more than an order of magnitude (Crawford, Malvar, and Morrill 2001).

Another relevant property of concrete behavior is that it tends to expand as load is applied, markedly so under stress near its peak capacity. This behavior is related to aggregate size in that concrete begins to fail in compression when large enough cracks open in the cement for the aggregate particles to ride over each other. Both CFRP and steel have a very high *modulus of elasticity* (i.e., high stiffness) so, as used to wrap an RC column, they are very effective at resisting concrete expansion (Crawford, Malvar, and Morrill 2001).

Columns and walls (B-2.1.1)

UFC 4-010-01 requires all exterior walls and load-carrying columns to be able to sustain a loss of lateral support at any floor level. Column lateral support is provided by adjacent beams or surrounding floor slabs. If a beam were removed during an explosion, the effective height of the connecting column or bearing wall would double (assuming two-stories of equal height). If this double height was not part of the original performance requirements, the likely result would be buckling and subsequent failure of the load-carrying element.

In order to meet the column performance requirement for loss of lateral support in a new building design, the UFC recommends that one story height be added to the nominal unsupported length of the load-bearing wall or column during the design analysis of the structure. Because most historic buildings were not originally designed with blast resistance in mind, it is necessary to analyze whether their original structural members meet this UFC load-carrying requirement. The capacity of any given structure can be calculated, or proven through testing or analysis. Each case must be considered individually and components analyzed independently. It should not be automatically assumed that aging structural infrastructure is noncompliant with UFC 4-010-01. It is possible that some historic buildings may have been designed for relatively large traditional loading patterns that were greater than the UFC minimums and therefore provide for some progressive collapse resistance.

The bulk of UFC 4-010-01 is predicated on the use of conventional construction, provided that adequate standoff is available to keep explosive threats at bay. Nonetheless and regardless of structural system, structural rehabilitation may be necessary to meet UFC 4-010-01 requirements when site planning measures will not provide the necessary standoff distance to meet the asset's level of protection. The treatments for columns and walls described below are offered as feasible alternatives for reaching the required level of protection with due consideration of the SOI Standards for Rehabilitation.

Treatment of columns

Columns — Encase Light Steel Members. This method (Figure 16) may be accomplished by adding a steel jacket around the existing thin-flanged steel col-

umn and filling the remaining void with either concrete or epoxy (Crawford 2002). This technique adds mass to the vulnerable member and helps to protect the flange sections, both of which increase the load-carrying capacity of a steel column. This method provides a low-tech means to add resilience to the member. Encasing steel members can be cost-effective when there are only a few vulnerable columns on the ground floor that need to be retrofitted (Smilowitz 2003). A disadvantage of this approach is that substantial dead weight is added to the column, depending on the thickness of the steel jacket and the volume of the concrete added to the system. Also, the overall size and aesthetic appearance of the column will differ significantly from the original design, which would be an NHPA compliance issue if the original column contributed to the building's appearance or historic significance.

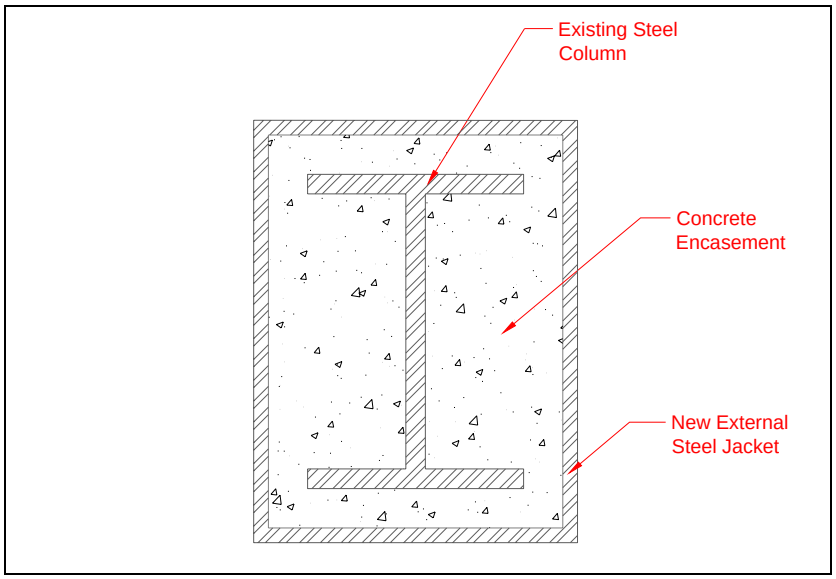

Figure 16. Steel column with concrete-filled steel jacket.

Columns – Reinforced Concrete Column Confinement Using Steel Jacket. One method of confining an RC column to resist blast loads and progressive collapse is to wrap it in a steel jacket. This technique has been demonstrated to be an economical way to retrofit RC structural members in existing

buildings. The steel jacket provides lateral confinement to increase the effective compressive load-carrying capability and limit deflection (Shi Zhang and Mai 2000). Although this method has similarities with a comparable jacketing technique for seismic resistance (Figure 17), the design procedure and detailing are different. A steel jacket can provide sufficient diagonal shear enhancement to prevent the formation of a 45 degree crack that would otherwise sever the column. The thickness of the steel jacket can be engineered to resist the specific design threat. One disadvantage of this technique is that it must be welded in place using heavy steel plates. Therefore it is not an aesthetically pleasing solution (Morrill, Malvar, Crawford and Ferritto 2004), although it may be appropriate for concealed load-bearing columns on historic buildings. Other disadvantages of this method include potential corrosion problems, relatively high cost, and the dead-weight of the material.

Figure 17. Seismic application of a steel jacket on an existing concrete column (Morley Builders 1997).

Columns — Reinforced Concrete Column Confinement Using CFRP Hoop Wrap. This rehabilitation technique (Figure 18) enables a column with few confining *stirrups* (shown in Figure 14) to repli-

cate the performance of a column with closely spaced stirrups. The material may either be applied as bands (i.e., 'hoops') around a column or in a manner analogous to the way an elastic bandage is wrapped continuously and progressively to stabilize an athlete's knee. As with steel stirrups, CFRP confinement of the concrete column (and any existing longitudinal reinforcement) produces higher strength and provides a more ductile column failure mode than the original member (Crawford, Malvar, and Morril 2001). Fiber-reinforced composite fabrics of various kinds are increasingly being used to provide additional load resistance in RC structures. CFRP wrap has several advantages over the steel jacketing method described above. The material increases column size and weight only marginally and it can be adhered to an irregularly shaped column section with relative ease (Crawford 2002). Because CFRP fabric is not highly ductile, it is not the best choice for enhancing RC column flexural strength. However, tests have shown that a hoop wrap alone provides an effective means to increase the blast resistance of an RC column (Crawford, Malvar, and Morrill 2001).

Figure 18. Column ductile performance enhanced by CFRP hoop wrap (left); wrapping detail (right) (Crawford, Malvar, and Morrill 2001).

Columns — Composite Flexure Strips for Reinforced Concrete Columns. To improve the flexural resistance of an RC column, CFRP reinforcement strips can be adhered to the column in the longitudinal direction. This method is best combined with the hoop wrapping technique described above, with the longitudinal flexure strips applied before the hoop wrap in order that the strips benefit from the confinement of the hoop wrap (Figure 19). While offering the same material benefits as other CFRP applications (material cost, light weight and bulk, etc.), this rehabilitation method is likely to increase the plastic moment only at column mid-height. The resulting flexural performance improvement may not prevent progressive collapse, however, if the bomb is located such that the blast pressures cause column base or beam connections to fail (Crawford, Malvar, and Morrill 2001).

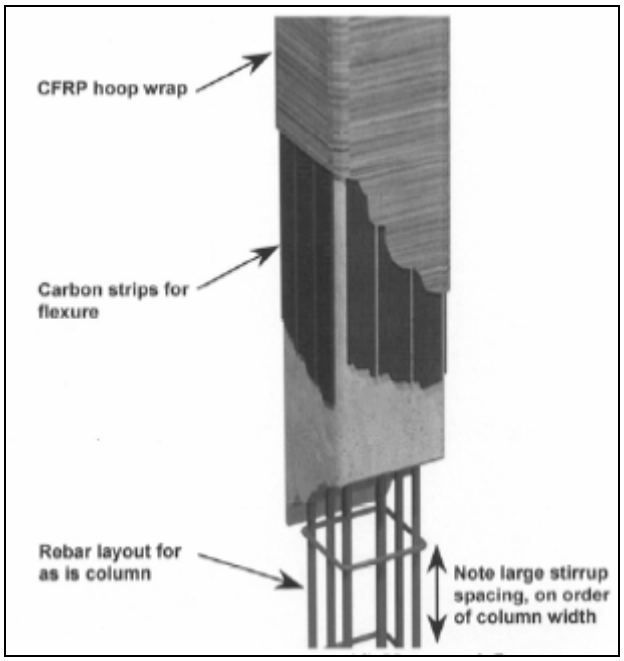

Figure 19. CFRP flexure strips applied under CFRP hoop wrap (Crawford, Malvar, and Morrill 2001).

Columns — Enhanced Connections for Structural Steel Frames. One commercial application of this method is the SidePlate® connection system,

which uses connection geometry to overcome fundamental problems inherent in the traditional structural steel connection. This product provides direct girder-to-girder structural continuity across a column using two parallel, full-depth side plates that provide a redundant link across a failed column (Figure 20). When a column fails with this technology in place, the girder on one side of the failed column is intended to remain joined to its counterpart on the other side of the failed column. After the impacted column fails, a double-span continuous girder remains intact, supported by the columns located on each side of the failed column. Although the resulting double-span girder may become overstressed, *catenary action* (Figure 21) develops between the remaining supported columns on each side of the failed column. As a result of catenary action, the beam will sag significantly but not break, providing ductile structural performance to resist progressive collapse (Houghton and Karns 2001). One disadvantage of this technology is that implementation must be specifically engineered for each different connection in a building, and that can be expensive. Rehabilitation of the connections between each beam, girder, and column must account for the placement of obstructing elements such as electrical buses or water pipes (Hamburger and Whittaker 2004). Furthermore, if the connections are located behind partition walls or within the confines of an exterior infill wall, installation will disrupt some building operations, possibly destroy historic fabric, and may alter the appearance of interior building features.

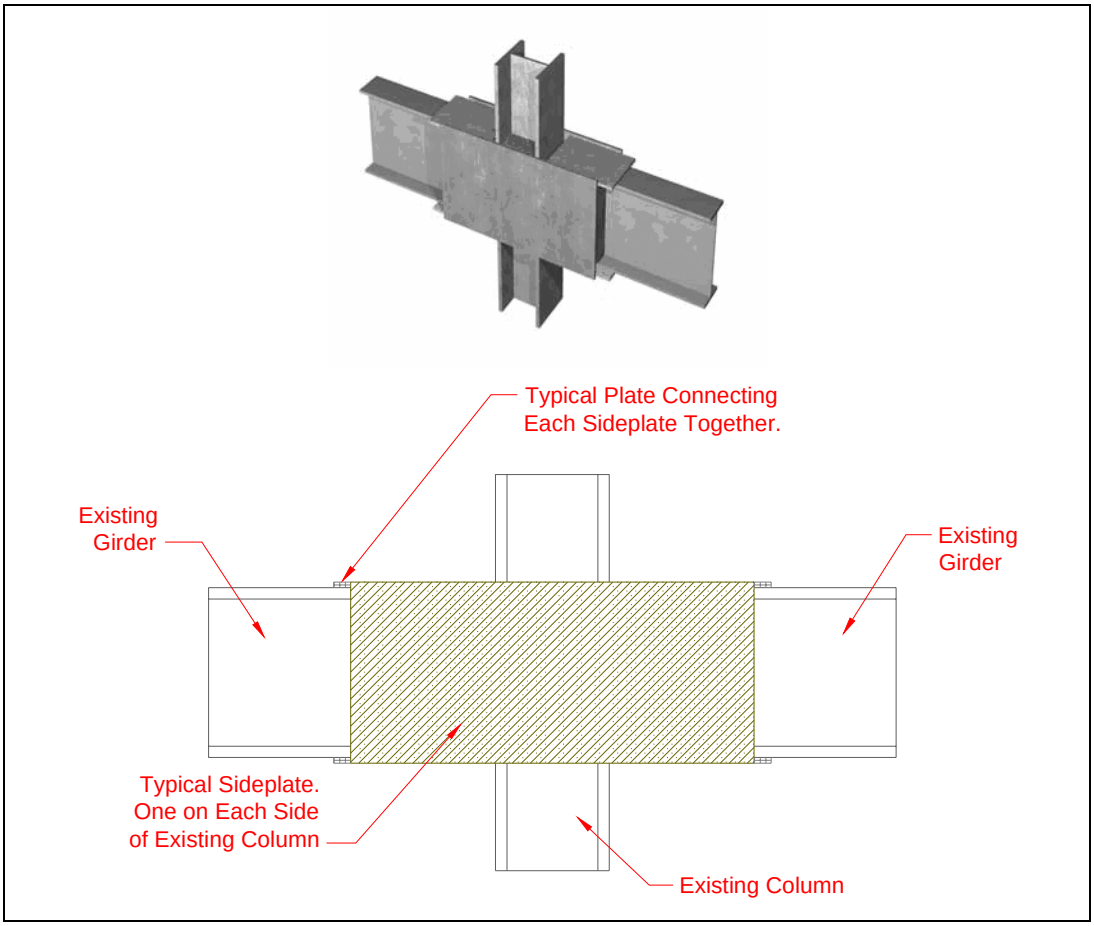

Figure 20. Enhanced structural steel connection
(upper illustration Houghton and Karns 2001).

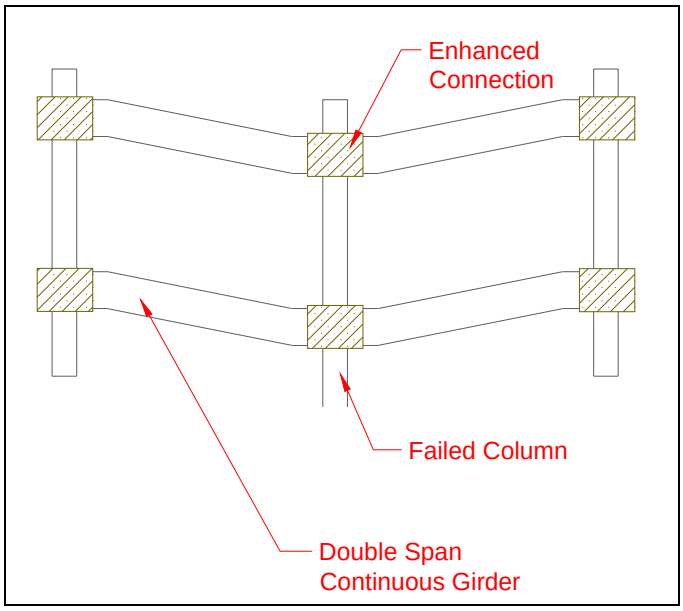

Figure 21. Conceptual diagram of catenary action.

Columns — Enhanced Reinforced Concrete Structural Connections. This technique shortens the effective length of the slab and improves resistance to punching shear, a catastrophic failure at the connection between the slab and the column (Figure 22). Drop panels or column heads may be added to the existing connection point between an RC column and the floor slab (Figure 23). These connection enhancements can help to delay or avoid a loss of contact between the slab and the column under blast loads. Reinforcement steel must be used to tie the drop panels or column heads effectively to the existing column and slab. Also, reinforcement should be provided continuously from one side of the column to the other, connecting the floor slab. This reinforcement resists brittle failure at the connection and provides an alternative path for shear transfer after the concrete has punched through (Ettouney, Smilowitz and Rittenhouse 1996). The connection behavior under blast loads is closely related to the quality of reinforcement detailing (Krauthammer 1999). Because historic buildings may have reinforcement detailing that is significantly different from that required by current building codes, each historic property must be evaluated on a case-by-case basis before this resolution is implemented.

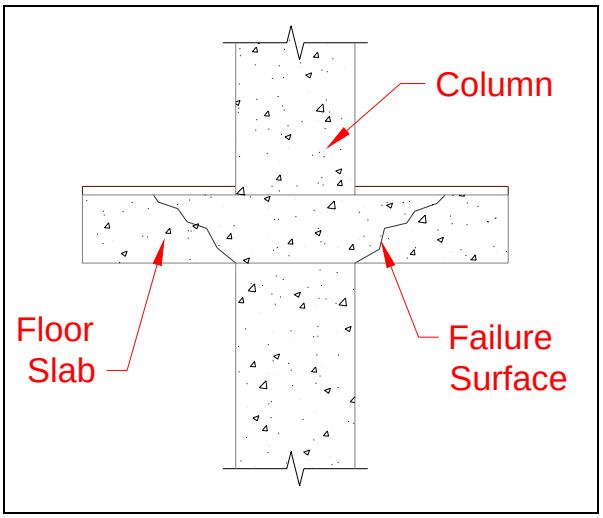

Figure 22. Conceptual diagram of punching shear.

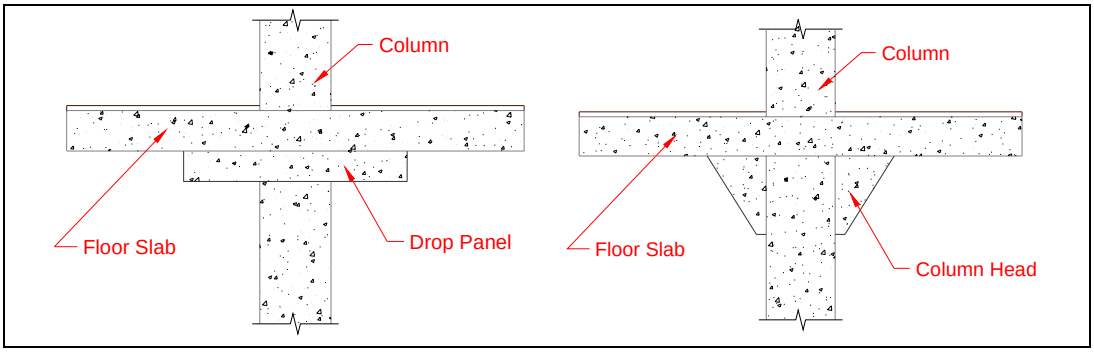

Figure 23. Details of drop panel and column head connection enhancements.

Treatment of walls

This discussion addresses primarily load-bearing walls because non-bearing walls are by definition not part of the structural system and therefore have little role to play in resisting progressive collapse. Load-bearing walls are highly susceptible to failure in a blast because they are designed to carry vertical gravity loads but are often relatively weak in terms of resisting out-of-plane horizontal forces. The purpose of a collapse-resistant retrofit for load-bearing walls is to engineer a failure mode that provides residual gravity support even after severe wall degradation at lower stories (Crawford 2002). An important but separate consideration for walls, discussed under Exterior masonry walls (UFC Standard 9, B-2.4), is how to prevent a blast-fragmented exterior wall from being propelled into the inhabited space and causing massive casualties.

Load Bearing Walls — Steel Column and Plate Reinforcement. This method provides alternate load paths when an external load bearing wall fails in a blast. A number of steel columns are secured behind an existing wall, structurally anchored at the floor and ceiling. Steel plates are then attached at the column flanges, creating a structural membrane capable of resisting tensile loads (Figure 24). The engineering and installation aspects of this structural retrofit are demanding, and it is crucial to ensure the quality of each connecting weld. Construction details must be building-specific and can be problematic depending on the nature and condition of existing structural systems, so the technique may be expensive (Ward 2004). However, because the backup retrofit is constructed inside the building shell, the façade and exterior elevations

are not negatively impacted, and the solution may therefore be appropriate for historic buildings with a high level of exterior integrity. Also, because this system is mechanically attached, it is likely to be more readily reversible than chemically bonded or adhered solutions.

Figure 24. Steel column and plate application (Ward 2004).

Load Bearing Walls — Aramid Laminate Reinforcement. An aramid laminate can be adhered to the inside surface of a load-bearing wall. In performance tests, this retrofit has been shown to limit wall deflections enough to prevent loss of bearing capacity even when the wall is heavily damaged (Crawford 2002). Out-of-plane wall strength also can be increased significantly using an aramid laminate. The laminate material comes in sheets with stiffness comparable to cardboard and is attached to the substrate with a polyurethane adhesive. The aramid fabric sheets are applied to the interior surface of the load-bearing wall in a manner similar to wallpaper. This method exploits the bidirectional strength of the laminate material for maximum wall performance enhancement. A potential problem with this technology is that bond failure may occur as a result of high stresses between the laminate and the masonry substrate. If the aramid material delaminates from the substrate as a result of those stresses, the wall is no better protected from a blast than it was prior to retrofit. Therefore, surface preparation of the wall is ex-

tremely important to ensure a proper bond between the aramid reinforcement and the substrate (Gilstrap and Dolan 1998). An important design consideration for this technology is moisture retention; if the aramid fabric forms a complete vapor barrier, the adhesive bond may deteriorate over time if moisture is retained at the interface of the adhesive and the masonry substrate.

Load Bearing Walls — Outrigger Load-Bearing System. The structural system of a historic building may be enhanced when perimeter frames (belts) and outrigger beams are used to carry gravity loads in conjunction with a load-bearing core. The system works by providing gravity support in tension from above the level where perimeter load-carrying elements have been destroyed. Outrigger beams that span from the perimeter frame to the core support transfer extra loading away from damaged exterior columns to the structural core walls, thereby providing redundancy to resist progressive collapse (Shahrooz, Deason, and Tunc 2004), as shown in Figure 25. The technology was originally designed to carry wind and seismic loads, but it has recently been applied to guard against progressive collapse. Although designed for high-rise construction, the system has been adapted to smaller-scale buildings where structural redundancy and alternate load paths are needed. If a building has internal RC shear walls or conveniently placed RC elevator shafts, these may be able to function as the core gravity support. In such cases, the core structure would have to be carefully analyzed to determine its load-carrying capacity. In some cases, a core structure would have to be constructed if one is not present in the existing building. The installation of the outrigger beams will inevitably cause disruption to the building interior.

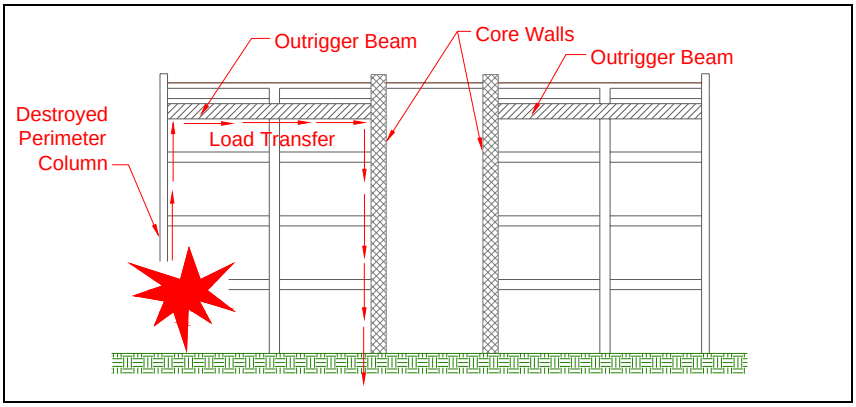

Figure 25. Outrigger beam and belt load-carrying system.

Other forms of exterior wall retrofits to resist progressive collapse are also available. A wall which is retrofitted by means of coring provides a stronger, more ductile wall than the unreinforced variety, and is capable of resisting out-of-plane loading created by an explosion. An RC backing wall or an RC shotcrete skin may be added to the inside face of an existing exterior wall, which adds strength and redundancy to the existing structural system. Additionally, 'soft-hardening' approaches to blast mitigation involve the addition of energy absorbing blocks filled with concrete and reinforcing steel to the interior surface of an existing wall. Adding a layer of GFRP fabric to the existing wall or installing a steel stud partition behind the existing wall may also provide benefits with respect to progressive collapse avoidance. These proposed rehabilitation techniques are covered in detail in Exterior masonry walls (UFC Standard 9, B-2.4) of this report because they can be readily applied to non-load bearing masonry walls as well.

Exterior member removal (B-2.1.2)

This portion of UFC Standard 6 addresses the direct loss of a supporting member during the first effects of an explosion. The purpose is to ensure adequate structural redundancy to transfer loads from the removed element to the rest of the structure.

When designing a new facility it is feasible to incorporate structural redundancy to compensate for the loss of an exterior column. In such a case, adequate redundant load paths are established in the structure for one or two floors above grade. The upgrade of an existing structure may not be easily accomplished through this same method, however, because the loss of a column line would increase the functional spans of all beams directly

above the zone of damage. Conventionally constructed historic buildings were typically not designed with blast-type loads in mind. It follows that the existing structural members in a historic building may be inadequately sized for purposes of avoiding progressive collapse and do not comply with paragraph B-2.1.2 of the UFC. It is also possible that historic buildings will vary widely in their material strength due to age and associated degradation. Each case will require local inspection and verification. RC frame structures, for example, would require patterns of reinforcement and connection details different than those typically applied to conventional structural design. That type of rehabilitation would be costly, invasive, and potentially counterproductive from a structural perspective due to assumptions or constraints inherent in the original building layout (Smilowitz 2003). Figure 26 and Figure 27 illustrate the response of a typical horizontal concrete beam when a primary load-bearing column is removed (Gould 2003).

Figure 26 is an exaggerated depiction of RC beam behavior under typical vertical load conditions. In positive-moment regions, the bottom fiber of the beam is stressed in tension and the top fiber is stressed in compression. In negative-moment regions the converse is true, with the bottom portion stressed in compression the top stressed in tension. Concrete performs well in compression but is considered to have no significant tensile strength. To complement those characteristics of concrete, steel reinforcement (which performs well in tension) is added to the bottom of beams in positive-moment regions and to the top of beams in negative-moment regions. The primary steel rebar is therefore effectively located in the necessary reaction areas. Combined in this way the two materials perform in composite to resist both the compressive and tensile forces produced by basic gravity loading.

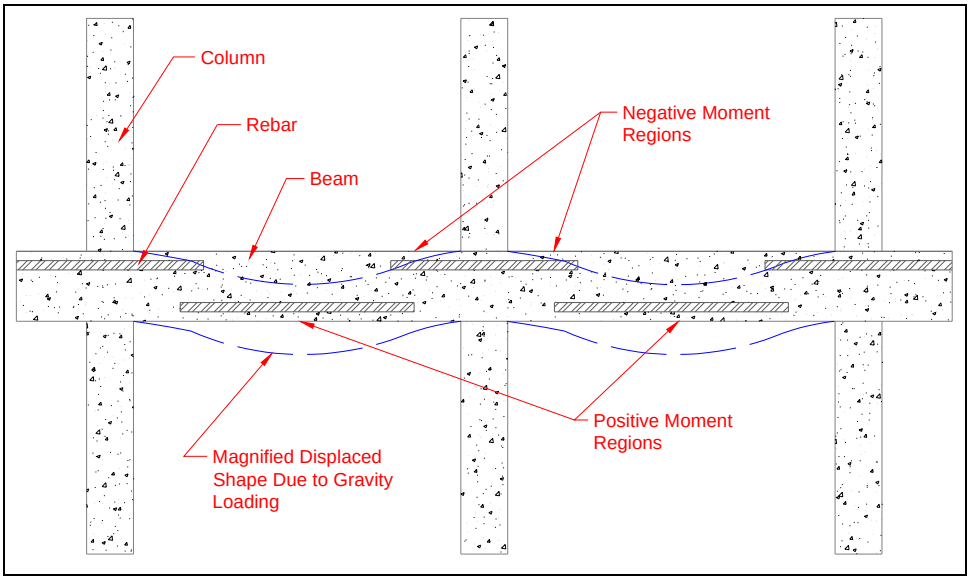

Figure 26. Typical reinforced concrete beam design for normal gravity loading.

Figure 27 represents the behavior of the same beam after a column is removed. In addition to the increased distance the beam must span, the primary steel rebar (shown as the cross-hatched horizontal lines) is not located properly to resist the new transferred load following loss of the column. The effective mid-span of the beam is located at the point where the interior column failed, which is where deflection is at maximum and the tensile stresses are greatest along the bottom of the beam. Because the initial design did not account for gravity support being lost, there is no steel at the bottom to resist the new tensile load, and the steel at the top of the beam is in a positive moment region. In this situation the primary steel rebar at the top of the beam is now effectively in the 'wrong' position and the unreinforced bottom portion of the beam is likely to fail in tension (Gould 2003).

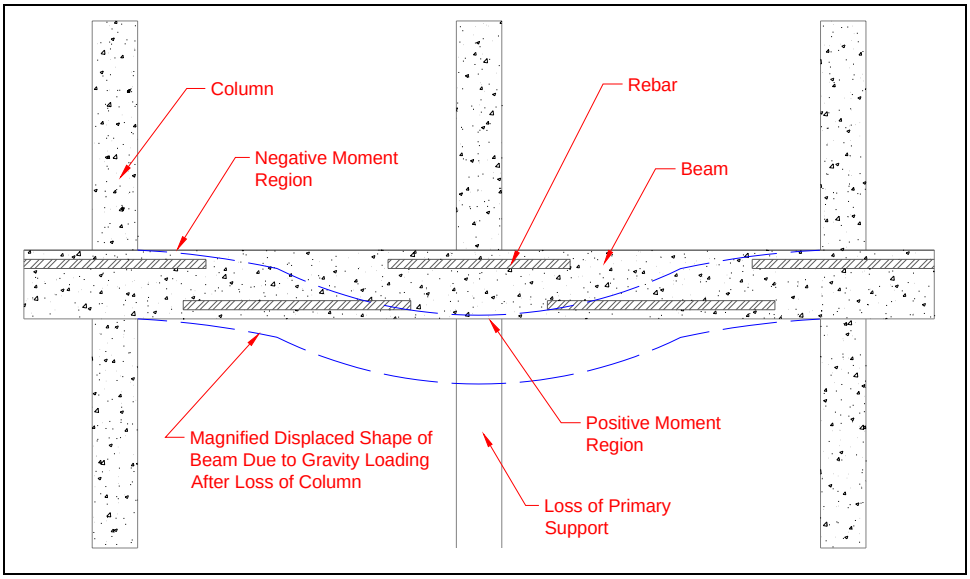

Figure 27. Reinforced concrete beam response to column loss.

Structural Redundancy — Steel Cable Support System. This structural rehabilitation method is designed to carry the gravity load of a collapsing floor in the event that its supporting columns and beams are destroyed in a blast. The cable system provides horizontal redundancy for a building's perimeter support beams, which may be vulnerable to a stationary vehicle bomb (Figure 28). This technology has been used in new construction as part of a missing-column strategy, and the concept may also be used in a retrofit application (Crawford 2002). Although the damaged floor slab may sag 2 – 3 ft at the point of greatest deflection, the cables provide sufficient residual capacity to allow occupants safe egress. Because this type of cable support system is designed to carry loads created by the destruction of a column on the perimeter of the building, implementation involves work on the building façade and exterior walls. The removal and replacement of affected portions of the building façade and installation of cables is relatively straightforward from an engineering and construction perspective, and it can be accomplished from the outside without forcing building occupants to move. Impact on a historic building's contributing elements will vary depending on building-specific engineering fac-

tors and the nature of any historically significant façade elements.

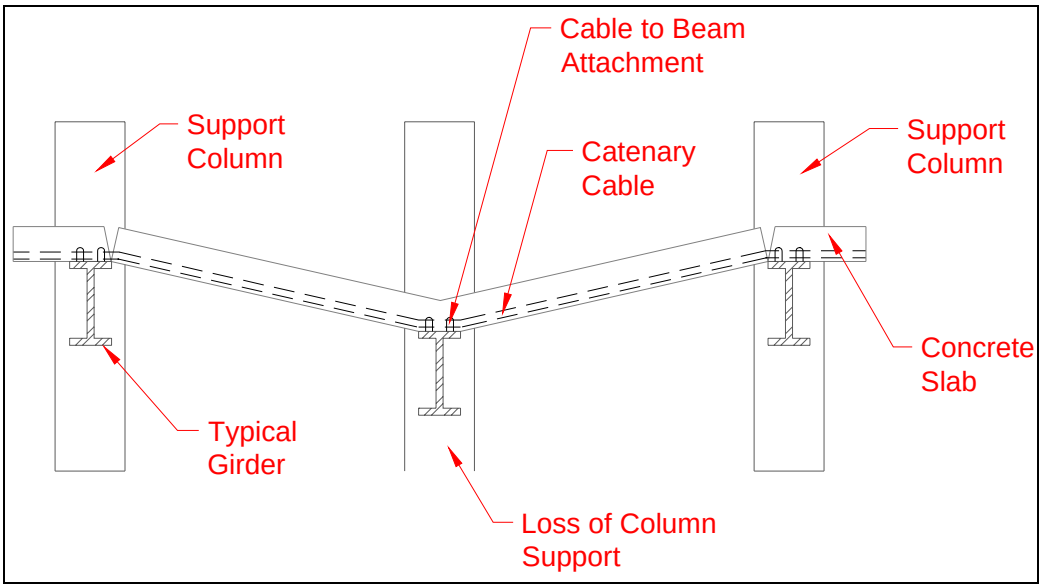

Figure 28. Conceptual diagram of cable support system for structural redundancy.

For the upgrade of an existing reinforced concrete structure, strengthening critical members to reduce the probability of catastrophic column failure may be more practical than upgrading beam reinforcement and connections using the alternate path method (Smilowitz 2003). Several alternatives discussed previously are potentially applicable for this rehabilitation scenario:

Reinforced Concrete Column Strengthening — Column Confinement Using Steel Jacket. Refer to text under "Treatment of columns" on page 55.

Reinforced Concrete Column Strengthening — Column Confinement with CFRP Hoop Wrap. Refer to text under "Treatment of columns" on page 55.

Reinforced Concrete Column Strengthening — Composite Flexure Strips for Columns. Refer to text under "Treatment of columns" on page 55.

Reinforced Concrete Column Strengthening — Enhanced Structural Connections. Refer to text under "Treatment of columns" on page 55.

Structural steel frames are homogeneous in nature and therefore do not present the same type of reinforcement issues as reinforced concrete frames. However, replacing existing steel beams with new, oversized beams capable of spanning across a failed column will usually be impractical. An oversized replacement beam would carry significantly more dead weight than the original beam, but its size may not allow for proper connection with the existing column. Furthermore, the general lack of work space associated with replacing a smaller component with a larger one can hinder installation unless removal of surrounding building fabric is possible. This introduces AT/HP compliance problems if these surroundings are historic. Consequently, upgrading existing steel frame structures may require strengthening critical members and providing for continuity across a failed column line, as previously discussed under "Treatment of columns".

Steel Column Strengthening — Encase Light Steel Members. Refer to text under "Treatment of columns" on page 55. This method can be used for the encasement of beams as well.

Steel Column Strengthening — Enhanced Connections for Structural Steel Frames. Refer to text under "Treatment of columns" on page 55.

Floors (B-2.1.3)

As noted previously, an explosion will create an uplift load on portions of a building located above the level of the burst. Because floors are engineered primarily for gravity loads they are designed for net downward loading and do not incorporate adequate tension reinforcement for load reversals. RC floor slabs subjected to significant uplift will undergo reversals in curvature.* It can be assumed that RC floor slabs in conventional historic construction do not have the necessary reinforcement patterns required to support such load reversals. Advanced composite materials have great po-

* In a one-way slab system, this would require mid-span tensile reinforcement at the top fiber and bottom tension reinforcement on the underside near supports.

tential for this type of structural rehabilitation because they have high tensile strength and can be attached to existing RC structural members without adding excessive mass.

Floors — CFRP Composite Mats. A lightweight CFRP mat can be adhered in-place to the existing slab at critical locations. The CFRP provides high tensile strength to supplement the inadequate tensile capacity of the concrete. Such an application can strengthen floors to resist uplift loading and reduce the likelihood of catastrophic slab failure (Smilowitz 2003). The composite mat is applied as a thin layer of fabric embedded in an adherent epoxy matrix. The mat can easily be finished using historically authentic or compatible floor coverings that are compliant with SOI Standards 6 and 9 as long as the treatment provides adequate protection of the CFRP mat from foot traffic. Because the slab and mat can be designed to be out of sight, AT/HP project teams may determine that this resolution has low impact on contributing elements of the historic building. Conversely, historic floors (e.g. decorative terrazzo) may be problematic with respect to SOI Standard 5 which requires the preservation of craftsmanship. Likewise, there are challenges related to the destruction of historic ceilings when reinforcing the underside of slabs. Also, the material is adhered to the slab in a manner that is not readily reversible, raising a potential conflict with SOI Standard 10 on reversibility. However, it seems unlikely that any need would arise in the future to remove this type of structural reinforcement.

Floors — CFRP Composite Rods. CFRP rods, like the mat application described above, can be used to provide the slab with tensile reinforcement at locations where it is critical to resist uplift-driven load reversals. Installation of the rods requires the etching of grooves into the slab at desired locations, then affixing the rods into the grooves with a tough, adherent polymer resin. After installation, an appropriate floor

cover may be placed to conceal any sign of the structural rehabilitation. Because the slab and its reinforcement materials can be obscured, AT/HP project teams may find that this resolution is suitable for use in historic buildings. This application may offer greater capacity than CFRP mats, but installation requires skilled workmanship, and this requirement may make CFRP rods more expensive to use than CFRP mats. Because this method has not been extensively evaluated in blast performance testing (Smilowitz 2003), a survey of the most recent structural engineering literature would be advisable to help validate any manufacturer claims.

Structural isolation (UFC Standard 7, B-2.2)

UFC Standard 7 aims to structurally compartmentalize building additions and portions of buildings that offer varying degrees of protection. It assumes that new UFC-compliant construction can protect against blasts better than existing unprotected buildings. In terms of AT design, a building's superstructure (as it relates to additions and occupancy) can and should be viewed as a collection of associated but separate structures. The advantage of this structural isolation is that a catastrophic structural failure in one portion of a building will not propagate to other portions through shared components of the superstructure. Therefore, structural isolation that is an incidental feature of a historic building that was added onto over time is beneficial for AT design and compliance with the UFC.

Building additions (B-2.2.1)

This portion of UFC Standard 7 requires that all new additions to existing buildings be designed as structurally independent from the adjacent original building. The purpose of this standard is to ensure that the collapse of one portion of a building will not cause another portion to collapse. Building additions designed to meet this standard do not present an inherent historic preservation conflict and may in fact support preservation goals. SOI Standard 10 requires that new additions be designed and constructed to allow for later removal without adverse impact on the historic building's essential form and integrity. An addition that conforms to SOI Standard 10 will be structurally isolated from the original historic building as an inci-

dental feature of the design, so no AT/HP-specific conflicts with UFC paragraph B-2.2.1 are a major concern.

Portions of buildings (B-2.2.2)

In areas of buildings that do not meet the criteria for inhabited spaces, the superstructure is to be structurally independent from inhabited areas. It is assumed that 'uninhabited' areas of a building will have fewer access control measures and fewer occupants to observe suspicious activity, and thus increases the vulnerability of such areas.

As in the case of building additions, this requirement minimizes the possibility that collapse of an uninhabited area will affect the stability of inhabited areas. This standard is not mandatory for existing buildings, but it should be considered for future rehabilitations in cases where it would be affordable and not adversely impact contributing features of the historic property. The following resolution does not address a requirement under UFC Standard 7, but could be considered as an additional recommended measure involving the isolation of building portions.

> **Building Portions — Incorporate a Bomb Shelter Area.** A bomb shelter area (BSA) constructed within a historic building can provide safe haven for building occupants. The BSA provides a place to which occupants may retreat to remove themselves from particularly vulnerable portions of the building (Smith and Rose 2002). Constructing a hardened internal safe haven into high-value portions of larger mixed-use historic buildings may be effective and more economically feasible than holistic structural treatment of the entire complex to meet higher levels of protection (Ward 2004). The use of a BSA can be tied to an established mass notification system (see UFC Standard 22).

Building overhangs (UFC Standard 8, B-2.3)

Building overhangs with inhabited spaces above present a serious vulnerability to a vehicle bomb when access is readily achievable by a terrorist. Overhangs are highly susceptible to collapse in an explosion that removes critical vertical support, especially when the overhang consists of multiple

stories. In such a case the remaining horizontal structural members cannot carry the overhang as a cantilever because they were not designed to do so. Various design issues associated with existing overhangs are shown in Figure 29.

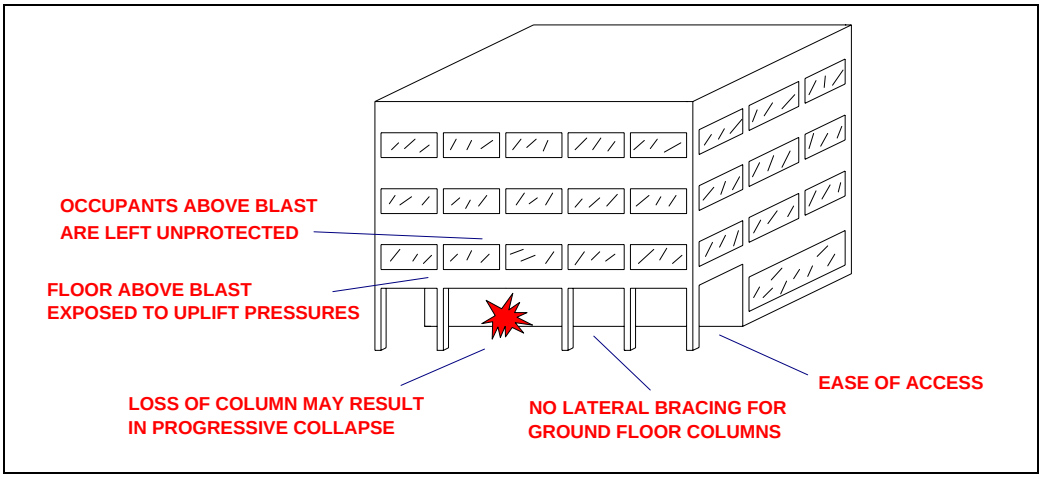

Figure 29. AT issues related to building overhangs.

Building Overhangs — Convert Overhang Interior Into Uninhabited Space. The most straightforward way to protect occupant safety under UFC Standard 8 may be to convert the overhang portion of the building to uninhabited use. In order to fall beneath the occupancy threshold for inhabited space, no more than 10 people may routinely work in the space and occupancy density must fall below one person per 40 gross square meters. For life-safety purposes, the best approach within this category of solutions may be to re-designate the overhang for use as storage only or another unoccupied function.

Parking and roadway restrictions (B-2.3.1)

Roadways and parking areas located under an overhang provide vehicle access to the exposed underside of a structural system. Such a layout makes it easy for a terrorist to move a vehicle bomb into close proximity to critical vertical supports and create the potential for mass casualties among occupants of the overhang area. UFC 4-010-01 prohibits the inclusion of roadways or parking areas underneath overhangs in new construction. For existing buildings, various site planning resolutions related to

vehicle access may help to provide the required level of protection related to building overhangs. For more information, see UFC Standard 1.

Floors (B-2.3.2)

This portion of UFC Standard 8 requires that floors beneath inhabited areas of an overhang shall not fail from a detonation beneath the overhang. The collapse of a floor slab is a common catalyst for progressive collapse. Rehabilitation resolutions described previously may help to prevent progressive collapse by preventing catastrophic failure of the slab.

Overhang Floors — CFRP Composite Mats. Refer to text under "Floors (B-2.1.3)" on page 71.

Overhang Floors — CFRP Composite Rods. Refer to text under "Floors (B-2.1.3)" on page 71.

Superstructure (B-2.3.3)

The term *superstructure* refers to the supporting elements (beams and columns) of a building located above the foundation. All progressive collapse provisions in UFC Standard 6 apply to all structural elements in and adjacent to overhangs. Resolutions pertaining to progressive collapse (UFC Standard 6) earlier in this document may also be applied to building overhangs.

As illustrated previously in Figure 29, columns supporting building overhangs are completely exposed to any close-range blast detonation. Because the columns supporting an overhang tend to be visually conspicuous, there may be special aesthetic sensitivities to be considered in any historic building rehabilitation. Therefore, conventional confinement techniques may not be suitable for exterior columns that support overhangs on historic buildings. It may be possible to employ one of the previously discussed rehabilitation techniques if it can incorporate claddings or finishes that comply with SOI Standards 6 and 9. Those standards specify that rehabilitation methods have an appearance compatible with historic building components without the use of mock historic details. Possible alternatives for rehabilitating overhang columns include the following:

Overhang Columns — Encase Light Steel Members. Refer to text under "Treatment of columns" on page 55.

Overhang Columns — RC Column Confinement Using Steel Jacket. Refer to text under "Treatment of columns" on page 55.

Overhang Columns — RC Column Confinement with CFRP Hoop Wrap. Refer to text under "Treatment of columns" on page 55.

Exterior masonry walls (UFC Standard 9, B-2.4)

UFC Standard 9 prohibits the use of URM walls in new building construction. The current criterion for reinforcement is a minimum of 0.05 percent reinforcing steel (by cross-sectional area) be embedded in the masonry. Even if a historic masonry building includes some reinforcement, it may not comply with modern detailing standards or building codes.* Therefore, it is likely that historic masonry construction will require some sort of structural rehabilitation in order to provide the level of protection required by UFC 4-010-01. If reinforcing steel cannot be readily added to existing URM walls, the UFC allows for alternate mitigating measures that provide a level of protection equivalent to reinforced masonry.

As noted under "Treatment of walls" on page 63, exterior load-bearing walls are highly vulnerable to failure in a blast event due to out-of-plane horizontal forces that greatly exceed design capacity. This vulnerability is especially true of URM, which has little flexural or shear strength in horizontal or diagonal directions. Consequently, URM is highly susceptible to catastrophic brittle failure in a blast, where instantaneous dynamic loads may be imposed from many different directions.

The poor blast performance of URM construction represents one of the major challenges for AT/HP teams because so many historic buildings are constructed using structural systems that employ URM as either a load-

* If the original structural drawings or blueprints are not available, structural inspections will be required to determine the existing reinforcing patterns of reinforced concrete members and connections. For historic buildings, noninvasive techniques (e.g. calibrated metal detectors, acoustic emission/sonic testing, and ground penetrating radar) will always be favored over chipping hammers and other destructive inspection methods.

bearing or infill material. URM vulnerabilities related to progressive collapse (UFC Standard 6) were discussed previously in this document under "Columns and walls (B-2.1.1)" on page 55. An important structural subsystem in many historic buildings is the URM infill wall (Figure 30). A typical infill material used in such applications is the concrete masonry unit (CMU), but standard clay bricks also have been used.

Figure 30. Example of historic building with infill panels (ERDC-CERL 2002).

Infill masonry walls are not likely to be reinforced with steel because they are not designed to carry significant gravity loads. The framing system carries the vertical loads while the infill wall functions mainly as part of the building envelope or, in some cases, provides in-plane shear resistance. When overloaded, URM infill panels will fracture and be propelled into the building interior. This masonry debris is an immediate threat to occupant life and safety (Engineering Technical Letter [ETL] 02-4), and the disintegration of the infill can radically alter the load-bearing capacity of the structural frame due to the loss of in-plane shear support, stresses from debris impact, and compromised connection points. The rehabilitation techniques discussed below address holding infill panel masonry together or at least preventing masonry from being propelled into the inhabited space at high velocities.

Historic preservation issues for exterior URM wall rehabilitation

Historic masonry buildings may be made of CMUs, clay masonry, or numerous types of special units. Masonry walls of the 19th century were typically multi-wythe brick constructions 12 in. to 16 in. thick. Alternately, historic limestone walls of large smooth- or ashlar-cut stone units could be as wide as 36 in. at the base. Early use of CMUs occurred in the 1900s and 1910s, but these constructs were largely unreinforced. Unfortunately, almost all blast testing of URM masonry walls to date has been conducted using modern CMU blocks. Consequently, the explosive effects on aging materials and wall assemblies remain largely unknown.

The majority of existing URM retrofits are based on the use of modern CMUs, and project teams must be aware of limitations when selecting an AT rehabilitation method. For instance, pre-1920 bricks were soft by today's standards and were held together with a particularly soft mortar to allow buildings to expand and contract as thermal changes occurred. Using structural fastening systems that are integrated with the historic masonry or adding any type of coating to historic masonry must be done with care so as not to render the historic masonry too stiff. This may lead to deterioration of the historic masonry or catastrophic wall failure in a blast.

Chemical reactivity between certain types of historic materials and advanced composites, polymers, or adhesives must be considered per SOI rehabilitation Standard 7 on gentle, appropriate treatments. For example, an adhesive that is acidic may chemically degrade concrete or limestone. Also, certain types of masonry systems may not be compatible with the mechanical fastening or chemical bonding methods used with some rehabilitation technologies. Various attachment techniques may also present potential conflicts with the SOI rehabilitation standards, either in terms of destructiveness to historic materials (SOI Standards 2 and 7) or irreversibility of the method (SOI Standard 10).

Another important consideration is the moisture retaining characteristics of the historic masonry. Insertion of any new interior wall behind an existing historic masonry wall (thus creating an additional wall cavity), or adding any type of coating to historic masonry, has the potential to trap moisture. Some structural measures may conflict with SOI Standards 7 (gentle, appropriate treatments) or 9 (compatible new additions) because they raise vapor barrier concerns. Measures to manage and control moisture must be incorporated into any rehabilitation design. Building monitoring

and routine maintenance procedures should be put into practice once construction is complete so any moisture retention or water infiltration issues can be quickly identified and addressed.

Another issue that must be considered when specifying AT/HP wall rehabilitation is the location of windows, doors, and other penetrations. Walls with large amounts of fenestration must be structurally analyzed to ensure that the building exterior provides a sufficient level of protection to the occupants (ETL 02-4). If doors and windows are much weaker than the wall when a blast occurs, any rehabilitation that was done to the wall may only marginally help to increase the level of protection inside. Any penetration will weaken the wall as a system, and that weakening must be accounted for in the rehabilitation application. Likewise, adequate rehabilitation of windows and doors to the required airblast standards must be considered a prerequisite for any wall rehabilitation project (ETL 1110-3-494).

Some resolutions presented below may result in a modified interior space. AT/HP conflicts will likely be minimal in historic buildings whose interiors are not significant or have been previously compromised with extensive modification. For buildings with historically significant interiors, AT/HP conflicts may be unavoidable. When possible, significant interior features and finishes should be removed during construction and carefully reapplied in accordance with SOI Standards 5 and 6 on craftsmanship and repairs.

Strengthening and reinforcing exterior URM walls

The classic approach to protecting a wall against blast effects is to increase its strength and rigidity. Exterior walls may be strengthened using engineering-based rehabilitation techniques that provide extra strength to resist the out-of-plane blast loads for which the walls were not originally designed (Ward 2004). While it is generally understood that reinforced masonry walls provide more blast protection than unreinforced masonry walls, a secondary objective of UFC Standard 9 is to prevent the component masonry wall materials from becoming injury-producing debris.

The addition of some kinds of URM wall rehabilitation also can provide structural redundancy. The techniques that immediately follow do so, and therefore also contribute to progressive collapse avoidance for load-bearing walls (see UFC Standard 6, page 49). These resolutions each pre-

sent an alternative means of providing new reinforcement for both unreinforced and under-reinforced masonry as prescribed by UFC criterion.

Reinforce Masonry Walls — Retrofitted Reinforcement by Means of Coring. This commercially marketed system can be used to reinforce existing unreinforced masonry walls against blast (Ward 2004). The technology provides a stronger, more ductile wall than unreinforced masonry, and is capable of resisting out-of-plane loading created by an explosion. To install, holes are drilled in the longitudinal direction of the wall and stainless steel tubes and anchors are inserted (Figure 31). The tube is sheathed in a mesh fabric sleeve (called a sock in the manufacturer literature) and fluid grout is injected under pressure through the anchor until reaching the far end of the tube. There the grout passes from the tube into the sleeve through a series of flood holes, and this action inflates the sleeve like a balloon that effectively constrains the grout to mechanically interlock with the masonry and rebar (Ward 2004). This technology includes some processes destructive to historic materials, posing a conflict with SOI Standard 7, but the reinforcement system is not visible after the exterior masonry is repaired. The method is relatively expensive, but it is possible to remove the anchors from the wall and partially reverse the retrofit, if necessary, in accordance with SOI Standard 10. It seems unlikely that a future need would arise to remove well executed reinforcement from a previously unreinforced structure, so future irreversibility of the technique need not disqualify it from consideration by project teams.

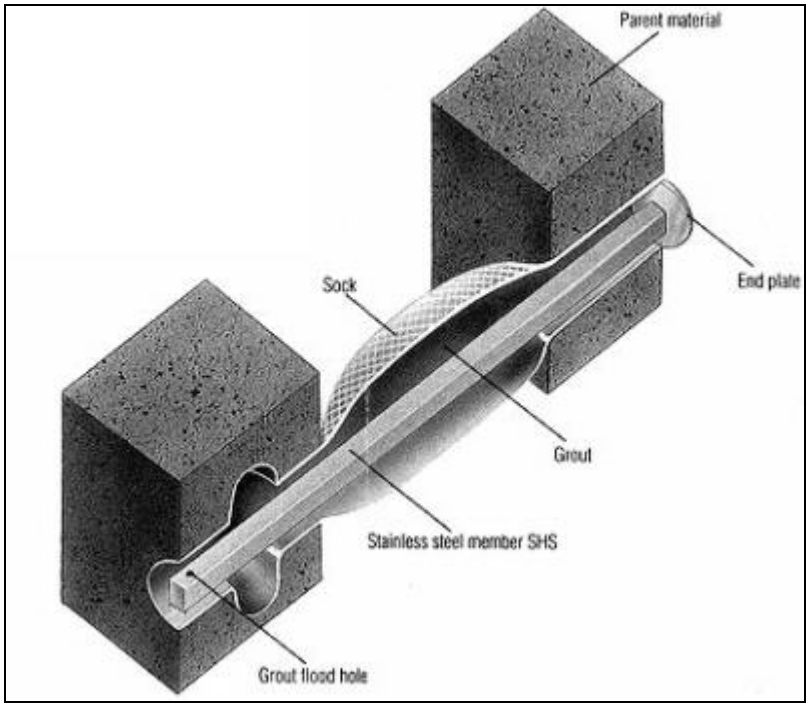

Figure 31. Retrofitted Reinforcement by means of coring (Sanicki 1998).

Reinforce Masonry Walls — Reinforced Concrete Backing Wall. A 4 – 6 inch thick RC backing wall is placed against the inside face of the existing masonry wall. This method can be effective both in bonded* or unbonded† applications to the interior of an existing URM wall. The RC backing wall adds both strength and ductility, and prevents fragmented masonry from penetrating the building envelope. It can be applied to walls with windows in most situations. The tops and bottoms of these new concrete walls are mechanically attached to existing slabs or beams, with anchors placed to lap with vertical wall reinforcement. The anchors can be either through-bolts or reinforcing bars epoxy-grouted into the existing structure (ETL

* If the surface of the CMU wall is properly prepared before placement of the concrete, a strong reliable bond will develop at the interface. The two walls will act as a composite unit, giving a substantial strength increase over the unbonded wall.

† The backing wall adds its strength to that of the existing masonry wall with no enhancement from composite action (ETL 1110-3-494). In such designs, the existing outer wall is assumed to fail under blast loading, and in doing so it will deflect inward by a significant amount. The remains of the outer masonry wall and the blast wave then impact on and are resisted by the internal concrete wall (Ward 2004). Because the unbonded variety is not attached or adhered to the existing URM wall, it is more readily reversible than the bonded retrofit and is therefore more compliant with SOI Standard 10.

1110-3-494). This rehabilitation method will create a loss of space on the interior of the building equivalent to the thickness of concrete and any necessary air gap (for unbonded applications) behind the existing wall (Ward 2004). The RC backing wall also adds significant dead load to the structure, and its effect on conventional static and seismic loading performance must be formally checked (ETL 1110-3-494).

Reinforce Masonry Walls — Reinforced Shotcrete Skin. Shotcrete is a structurally sound, durable high-strength mortar that bonds extremely well to masonry surfaces. A reinforced shotcrete skin serves a function similar to the RC backing wall in terms of structural performance. A 4 – 6 inch thick layer of shotcrete may be sprayed onto the interior surface of an URM wall with reinforcement detailing in place. The unreinforced masonry wall may be dowelled into the cured shotcrete skin, creating a new structural system that performs in composite action. Shotcrete also may be applied to the exterior of a URM wall, providing the advantage of its inherent compressive strength (Brown and Maji 2002). If the shotcrete mixture can be designed to complement the historic original, this exterior layer may support compliance with SOI Standards 6 and 9. However, this approach may require that additional measures be taken on the interior of the building to ensure occupants are protected from blast-fragmented masonry. The shotcrete is sprayed directly onto the existing URM wall and, where sufficient surface preparation has been performed, it forms a strong bond that is irreversible in practical terms. For this reason, the method may conflict with SOI Standard 10.

In addition, there is a new engineering approach to the problem of sheltering building occupants from blast effects and fragment penetration of the building envelope. This approach, called *soft hardening*, absorbs blast energy using resilient materials in combination with new concrete and reinforcement. A relatively soft, compressible hollow block filled with concrete

and reinforcement steel is mechanically attached to an existing URM wall to create a new composite structural system. The confinement of the load-bearing concrete core delays tensile cracking under blast loads and resists fragmentation and spalling, which enhances protection of the building interior (Elron, Negri, and MacKenzie 1999). Soft-hardening provides some limited load-carrying redundancy to the system that helps to resist progressive collapse (UFC Standard 6) initiated by the loss of load-bearing walls. One soft-hardening product that has been extensively tested is called Durisol® block.

Soft-Hardening — Durisol® Block. This commercially available construction system is based on a hollow block, similar in form to a CMU, that is fabricated using a wood-based composite material (Figure 32). The cores of the Durisol® blocks are assembled into a supplementary wall, filled with reinforcing steel and concrete, and doweled into an existing URM wall. The technology enhances URM construction by adding mass and improving flexural properties. Durisol® blocks have been shown to be highly resilient in blast loading, considerably delaying spalling and effectively dissipating blast energy (Ward 2004). Blast mitigation is achieved partly by energy absorption and partly through improved wall flexure properties (Elron, Negri, and MacKenzie 1999). Marketing literature claims that the system is easy to implement and requires no special masonry construction techniques, so it may provide an expedient solution for strengthening URM structures (Ward 2004). Durisol® blocks are manufactured in various sizes and forms, and may conform to or complement many architectural styles and structural systems in support of SOI Standards 6 and 9. However, the usual recommended thickness of the wall is 6 inches, which will tend to reduce the availability of functional interior space (Elron, Negri, and MacKenzie 1999).

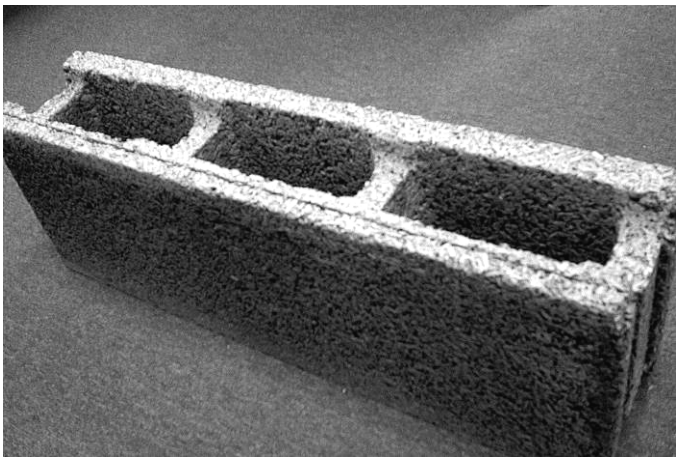

Figure 32. Individual Durisol® block showing cavities for concrete and steel reinforcement (ERDC-CERL 2005).

Alternate mitigating measures for exterior URM walls

Another category of solutions addressing UFC Standard 9 consists of materials and methods intended to keep URM wall fragments outside the occupied space without protecting the wall itself. Such solutions do not reinforce the wall in accordance with UFC Standard 9 but may be used as alternative 'mitigating measures'. This category of solutions, referred to as *catcher systems*, tends to be much less expensive than structural wall upgrades (Sunshine, Swanson, and Sweedock, not dated). Catcher systems comply with UFC 4-010-01 if they are determined to provide an equivalent level of protection when compared to the requirements for reinforced masonry walls specified in the UFC. The primary purpose of these AT/HP rehabilitation techniques addressing UFC Standard 9 is to reduce spalling of masonry wall segments in order to protect occupants from deadly debris.

The first three resolutions in the series below (spray-on polymers, geotextiles, and sheet steel) add little strength to the system and do not provide any structural redundancy. Consequently, these rehabilitation methods are only effective for use on infill masonry wall panels. The fourth resolution (GRFP fabric) effectively catches debris while also adding some out-of-plane strength to the system. The next resolution in this category (steel stud partition) is robust enough to act as a secondary structural system if the original load-bearing wall fails and it therefore has some limited applicability to UFC Standard 6 (see page 49).

Fragmentation Containment — Spray-on Polymer Materials. A polymer coating similar to

those used in spray-on truck bed liners may be bonded to the interior of existing masonry walls to improve blast performance. The coating forms a tensile membrane that prevents fragmented masonry from being propelled into the occupied building space and marginally enhances the flexural capacity of the masonry (Ward 2004). Under blast loading the polymer material deforms but remains bonded with the fragmented wall material. The blast energy is dissipated both by elastic deformation of the polymer and masonry failure mechanisms, and wall fragments remain sequestered from the occupied space (Smilowitz 2003). A CMU wall treated with this type of polymer material requires significantly less standoff than an untreated wall of the same construction to achieve the same level of protection (Figure 33). The coating is spray-applied to a minimum thickness of 0.25 inch. Gaps in the masonry exceeding approximately 0.0625 inch may cause breaks in the membrane under blast loads, so all such gaps in historic masonry must be carefully identified and effectively patched before application. The polymer material also must be well anchored to structural members (e.g., RC floors, ceilings, partitions, structural framing) in order to effectively contain the wall fragments. Specifically, the polymer membrane must be applied to overlap such components by a minimum of 6 inches, as shown in Figure 34 (ETL 02-4). Unlike many wall retrofits, the spray-on polymer does not require any mechanical connections. The polymer material itself is relatively inexpensive, but surface preparation and spray application requirements are rigorous (Ward 2004), and those activities represent a large percentage of the AT upgrade cost. During application, building occupants must be protected from contact with the polymer material and its fumes (ETL 02-4). Because the material chemically bonds to its substrate, it must be considered practically irreversible and therefore may conflict with SOI Standard 10.

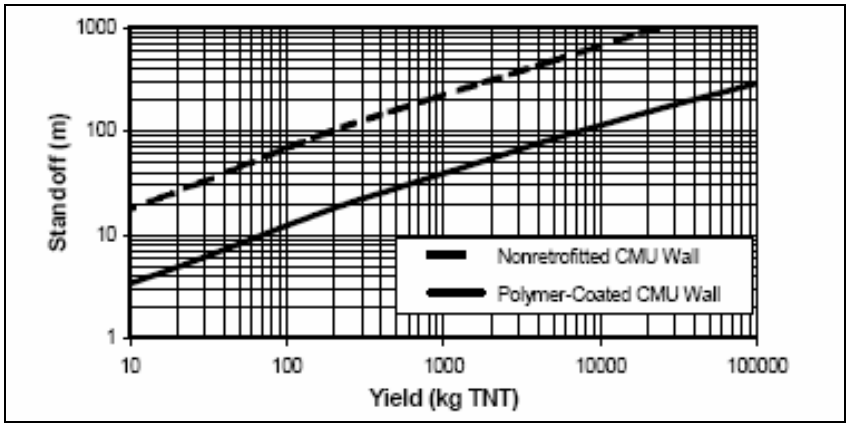

Figure 33. Comparison of standoff required for CMU walls with and without sprayed polymer coating (ETL 02-4).

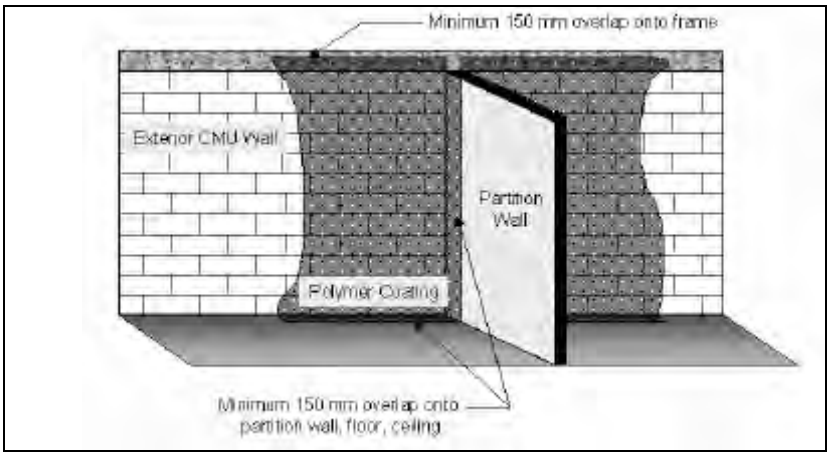

Figure 34. Polymer coating overlapping structural components (ETL 02-4).

Fragmentation Containment — Geotextile Fabric Catcher System. A curtain of fabric is placed behind the existing masonry wall, effectively covering the entire inside face of the wall. The fabrics are typically woven polypropylene, similar to those used to make sandbags, and often referred to as *geotextiles* (Figure 35). In an explosion, the fabric catches broken pieces of the wall, preventing them from flying into inhabited space. Like the spray-on polymer application discussed above, this solution is a debris-catching system rather than a strengthening technology. The method is effective, relatively inexpensive, uses lightweight materials, and is easy to install. The fabric is mechanically anchored to the building frame, generally using plates through-bolted to floor and

ceiling slabs (Figure 36). Members in the existing structural system must be verified to be strong enough to carry the design blast load as transferred from the catcher system connection points (ETL 1110-3-494). Special installation details must be developed for walls with windows because this fabric-based catcher is designed to span continuously from floor to ceiling. These fabrics may also be adhered to the internal face of the masonry wall (Ward 2004), but the use of adhesives will render the geotextile retrofit irreversible and thus introduce a compliance problem related to SOI Standard 10.

Figure 35. Mechanically fastened geotextile catcher system (Coltharp and Hall 2003).

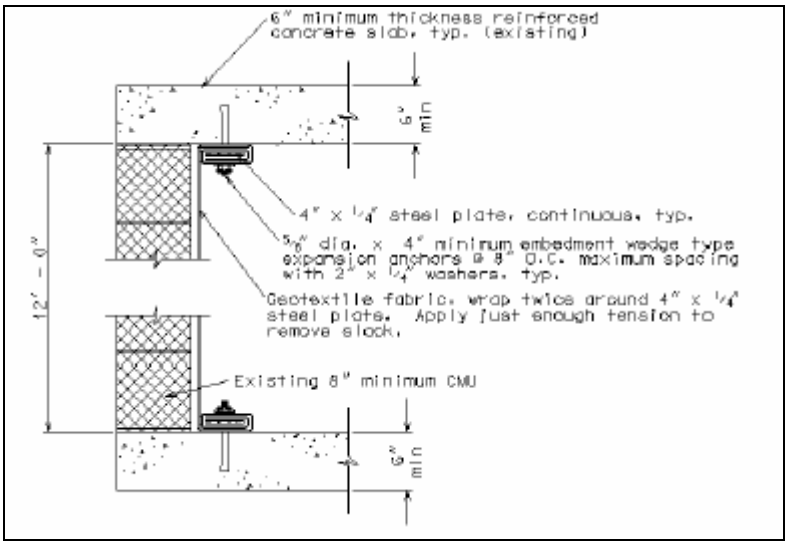

Figure 36. Cross section of geotextile fabric installation (ETL-1110-3-494).

Fragmentation Containment — Sheet Steel Wall Catcher System. This method employs sheet steel anchored to structural floor and ceiling members to prevent fragmented exterior wall materials from entering occupied space (Figure 37). The steel is typically adhered to the inside of the existing masonry wall and finished with a conventional interior wall cladding. Advantages of this method include a high strength-to-weight ratio, ductile performance, ease of fabrication, and familiarity to construction personnel. The thickness specified may be varied based on the severity of the threat. A horizontal bend is worked into each sheet at top and bottom, providing 6 inch legs that are mechanically anchored to structural floor and ceiling members. The anchorage system is specially detailed to prevent the sheets from pulling out over the bolt heads during a blast (Coltharp and Hall 2002).

Figure 37. Sheet steel application pretest (left) and posttest (right) (Coltharp and Hall 2003).

Fragmentation Containment – GFRP fabric. The purpose of a glass fiber reinforced polymer (GFRP) system for URM is to increase the moment capacity of the wall. The material also contains or reduces the velocity of blast-propelled wall fragments. This type of reinforcement is laid up on the interior face of the wall with an epoxy resin, providing additional tensile strength. The composite material holds the masonry together, which helps to ensure that it continues carrying its compressive load after initial blast damage (Brown and Maji 2002). The GFRP is adhered directly to existing walls, and further affixed to the superstructure at floor and ceiling. Good workmanship is essential for proper performance, and

installation can be difficult. A successful application would be considered irreversible in a practical sense, so compliance with SOI Standard 10 could be an issue.

Fragmentation Containment — Steel Stud Partition. Conventional light gauge steel studs may be used with a specialized type of reinforced gypsum board to construct a wall inside an existing URM wall (Coltharp and Hall 2002), as illustrated in Figure 38. The primary application of this method is to keep debris from a failed façade out of occupied interior space. An important secondary benefit of this method is that the partition may in many cases be robust enough to act as redundant load-bearing system if the external wall catastrophically fails. Steel stud walls are relatively simple to install and they require no masonry wall surface preparation because the new wall is anchored to the concrete structural diaphragms at the floor and ceiling using concrete anchors. The reinforced gypsum board is attached to the interior surface of the steel studs using adhesives and screws with bearing strips that prevent the gypsum board from pulling over the screw heads during blast loading. Blast-resistant windows can be installed in a framed opening in the steel stud wall (Coltharp and Hall 2002). This method reduces available floor space by approximately 1 – 1.5 sq ft per linear foot of installed partition due to the clear space required between the exterior masonry wall and the new stud wall (Ward 2004). If loss of interior floor space and interior changes to windows are acceptable, however, this retrofit may be cost-effective while leaving historically significant building features unaffected or restorable.

Figure 38. Steel stud partition system (Coltharp and Hall 2002).

For load-bearing walls, a catcher system alone may not provide the required minimum protection as specified by UFC requirements. In this case, structural members may be added behind the existing URM wall in combination with a catcher system.

Reinforce and Contain Masonry Walls — Steel Columns and Catch System. Steel columns are erected inside the building to support structural diaphragms above, providing load-bearing redundancy. Additionally, a catch system is affixed to the columns or existing wall in order to prevent blast debris from entering the building (Sunshine, Swanson, and Swedock not dated). Catch systems can be designed using sheet steel or geotextile fabric as described above. The disadvantages of this technique are comparable to others using a protective membrane with supplementary vertical structural supports. Some floor space will be lost and interior wall treatments will need to be removed during installation. A well designed application can leave historically significant features intact.

Innovative new materials

Emerging alternative materials not used in conventional building construction provide potential solutions for AT structural design. In situations where conventional structural treatments may be too massive for the available gravity support or too labor-intensive to implement, certain innovative new material systems may be worthwhile to examine because of

their light weight and high tensile strength (Smilowitz 2004). Many techniques are currently being investigated for effectiveness in preventing the blast fragmentation of URM walls. Most are not yet commercially available or ready for widespread application, however, because the developers are still addressing the issues of high material cost, difficulty adhering the material to nonstructural masonry, and anchorage to the structure (Ward 2004).

3 Architectural Design: Reducing Glazing-Related Blast Hazards

Glazing hazards

The building façade (cladding, windows, and doors) is considered the first line of defense against an explosive blast. Because glazing is the weakest component of the building facade, even small explosions will cause it to shatter (Norville and Conrath 2001). Large explosions not only break glass, but also impose extreme overpressures (i.e., high above atmospheric pressure) on the building interior. The overpressure propels glass fragments into the building at speeds in excess of 100 ft/s, creating an unavoidable hazard to safety and life (Norville et al. 1999).

Glass fragmentation is the largest cause of injuries to building occupants after an explosion. About 75 percent of all building damage and bodily injuries from bomb blasts have been attributed to window failure and the resulting debris (Smith and Renfroe 2005).* For this reason, UFC 4-010-01 directs considerable attention toward the issue of window performance in a blast (Figure 39).†

Historic preservation issues

The blast window design process is complicated when the building to be protected is listed or eligible for listing on the National Register. Such buildings, referred to here as *historic buildings* for brevity, must be rehabilitated according to the SOI Standards for Rehabilitation (36 CFR Part 67) in order to comply with the National Historic Preservation Act of 1966 as amended (16 USC 470). Historic windows on such buildings are likely to require major modification, barrier protection, or full replacement to provide the level of protection required by UFC 4-010-01.

* Among 405 injured persons who responded to a survivor survey taken by the Oklahoma State Department of Health, 266 people (66% of respondents) attributed their injuries to flying glass or falling on broken glass (Smith 2003). In the attack on the U.S. embassy in Kenya approximately 90 people were blinded by glass fragments (Smith and Renfroe 2005).

† UFC 4-010-01 revisions are underway that defer to ASTM F2248, Standard Practice for Specifying an Equivalent 3-Second Duration Design Loading for Blast Resistant Glazing Fabricated with Laminated Glass, for laminated glazing specifications.

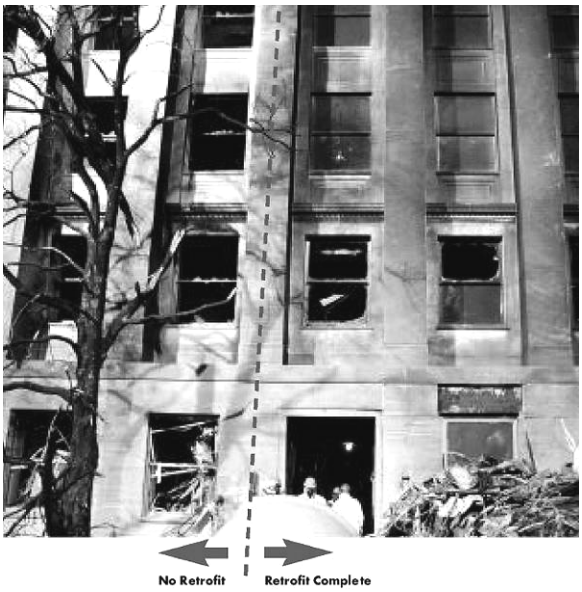

Figure 39. Pentagon immediately after September 11, 2001, showing intact blast-resistant windows at right (DON 2001).

Rehabilitation for any purpose inherently involves some alteration of the historic building, but the SOI Standards for Rehabilitation require that modifications not degrade materials, features, or finishes that are important in defining the building's historic character. Because windows typically contribute to a building's historic significance, window projects tend to negatively impact historic integrity. Common negative impacts include incompatible window profiles, inappropriate material choices, changes in operability that affect appearance and use, and window unit installation or performance problems that damage the historic building envelope. In a blast-resistant window project, the primary preservation objective is to minimize the negative impacts of removing or modifying historical materials and features.

Complying with the SOI rehabilitation standards

The main historic preservation standards of interest in a blast window project are SOI Rehabilitation Standards 9 and 10, both of which address building additions or alterations. Standard 9 applies to new additions (e.g. replacement windows or secondary windows) and alterations (e.g. window-related changes to the building envelope). The challenge is to simultaneously differentiate and integrate the new and the old. When steel- or aluminum-framed windows are selected to replace wood-framed windows, the substitution of materials provides the differentiation. When new metal windows are selected to replace existing metal windows, the frame mem-

ber design and glazing will typically differentiate the new from the old. When double-hung units are replaced with casement windows due to framing requirements, the change in functionality will set them apart.

Integrating the new with the old is the more difficult requirement in historic architecture. While the overall size, scale, and proportion of new windows must match the old to fit the historic fenestration, successfully integrating the new units with the historic materials, architectural features, and massing is more difficult.

Wood and vinyl historic window frames must usually be replaced with steel or aluminum units to meet UFC performance requirements. The replacement materials will be obvious at close range, but less so at a distance. The application of imitation finishes to replacement window frames can emulate the appearance of historic material such as stone, wood grain, or metallic patinas. Glazing replacement is less likely to affect window aesthetics, but tints and coatings are available to alter the visual qualities of replacement laminated glazing if necessary. Tints and coatings can enhance visual and thermal comfort by controlling glare, managing daylight, and minimizing thermal gains and losses. Careful selection of glazing tints and coatings can serve historic preservation purposes where maintaining a specific reflective quality is desirable.

In order to comply with the SOI rehabilitation standards, the visual elements of a blast window replacement unit must be visually compatible with the style, configuration, pattern of lights (i.e., panes), colors, and decorative features of the historic unit. Nonstructural ornamental mullions may be attached to give replacement units an appropriate historic style and light pattern. Authentic historic multi-pane configurations will almost always have to be replaced with a single pane of laminated blast-resistant glazing in order to provide the required level of protection.

The massing and profile of replacement sashes and mullions must also match those of the historic units. Similar profiles will produce comparable shadow lines on the building façade and preserve that aspect of the historic building's distinctive exterior aesthetics.

The design and compatibility issues outlined above are discussed in the context of exterior appearance, but they also apply to the view from indoors if the building interior spaces are historically significant. Therefore,

interior aesthetic compatibility may be an issue when selecting blast-resistant replacement windows (Lin et al. 2004). Replacement windows must be visually compatible with the design and finish of historically significant interiors. Incompatible window profiles, unprofessional framing, inappropriate millwork, and changes in operability that affect appearance can negatively affect historic interiors. A major issue related to interiors can arise when a blast-resistant replacement unit requires supplemental interior structural supports and connections to ensure adequate blast performance. Modifications of that type may be concealed by using historically compatible millwork, detailing, and finishes.

Because the expected life of windows is shorter than the service life of a well constructed permanent building, architects generally design fenestration so windows can be removed and replaced when necessary. Therefore, the installation of blast windows may usually be considered to be a *reversible addition* in terms of SOI Rehabilitation Standard 10. However, because blast window performance may depend to some degree on strengthening structural members and anchorage, historic building materials and details adjacent to the rough opening may be damaged or irreversibly modified during a replacement project. If changes to cladding, trim, or other architectural features are necessary to ensure proper window structural performance under blast loading, those alterations should be carried out as specified in SOI Standard 6, which is intended to sustain a building's historic character through a rehabilitation by the use of appropriate and compatible design principles, colors, textures, and materials. Ultimately, some high-quality blast-resistant replacement windows may simply be unsuitable for historic buildings because proper installation would irreversibly alter significance-contributing architectural elements (Lin et al. 2004).

The goal of the blast-resistant window project team should be to identify solutions that will comply with UFC 4-010-01 and conform to the SOI rehabilitation standards. AT/HP dual compliance can be greatly facilitated through the collaboration of protective design and cultural resources personnel with the support of installation planners, facility managers, construction supervisors, and work crews. Some of the AT/HP resolutions presented in this document may have limited applicability, but they are included to provide the fullest range of alternatives for project teams.

Avoiding noncompliant solutions

Some common "quick fix" techniques used to protect building occupants from glass-related hazards should be viewed with skepticism because they often fall short of compliance with either or both aspects of AT/HP rules.

Fragment retention film

Fragment retention film (FRF) is a thin, transparent sheet of tough material adhered to the interior surface of a window. It holds glass fragments together after a blast. These films are categorized by method of installation — daylighted, wet glazed, and mechanically attached. Daylighted and wet-glazed applications generally have no visual impact on a building façade; mechanically attached films use hardware that may affect the appearance and operability of historic windows.

Fragment retention films have been widely used because they are a relatively practical and affordable (in terms of first costs) alternative to replacement windows (Smith and Renfroe 2005). However, due to their composition and adhesives, films have a relatively short service life, and performance can degrade over a fairly short time. The adhesives eventually lose their bonding power. FRF tends to yellow with age and scratch easily to obscure sightlines. Therefore, periodic reapplication is necessary, which is time-consuming and expensive in terms of life-cycle cost. Over the long term, the cost of scheduled reapplications would likely equal or exceed the cost of a suitable replacement window. Additionally, the application, removal, and reapplication of FRF can stress or damage historic window assemblies. Also, despite its apparent advantages, the application of FRF alone will not meet UFC 4-010-01 standards.

Fragment-catching devices

These products are used to protect building occupants where it is expected that a blast would detach the glazing from its frame as fragments or a partially unified mass. Catch devices may not be highly beneficial unless used in combination with some form of blast-resistant glazing or fragment retention film. Product types currently available include cable or bar systems, louvers, weighted blast curtains, blast shades, and a variety of rigid or flexible screens (Crawford et al. 2000; Lin et al. 2004). In addition to not satisfying UFC standards, the protection offered by some types of catch devices, such as blast curtains, can be deactivated by building occu-

pants (Lin, Hinman, Stone and Roberts 2004). Catch devices usually have no exterior visual impact, but they may negatively affect the interior.

UFC Standard 10: Windows, Skylights, and Glazed Doors (B-3.1)

Conventional window framing, glazing, and anchorage tend to be the "weak link" in a building envelope exposed to a blast. To address this vulnerability, UFC Standard 10 provides baseline design requirements for windows, skylights, and glazed doors to improve protection of building occupants. These requirements for existing buildings assume that the minimum standoff distances prescribed in UFC Standard 1 are in place. In other words, the UFC does not accept blast-resistant windows as a *substitute* for insufficient standoff. UFC Standard 10 covers building elements with glazed openings not exceeding 3 square meters (32 square feet).

Blast protection through balanced design

The protection provided by a blast window depends on an engineering principle called *balanced design*. The objective of the principle is to ensure that the protective glazing fractures according to design before the frame members or connectors (Hinman 2005). If the frame or connectors fail before the glass, a blast would propel the window pane or entire unit into the interior, harming anyone in its path. Because glazing makes up the largest portion of exposed window unit surface area, the selected material should be able to dissipate much blast energy instead of transferring it to the frame.

Laminated glass is often used in blast windows. It is designed to dissipate energy when its glass layers fracture. However, the shards remain bonded to the polymer interlayer of this glazing to prevent the fragments from exploding into the interior as shrapnel. The interlayer absorbs much of the transferred energy through tensile membrane action. Both the glazing fracture and interlayer membrane action greatly reduce the amount of blast energy transferred directly to the connectors and frame.

Balanced design provides a blast load path from the glazing through connectors and frame members to the building superstructure (Figure 40), the foundation, and the ground. These controlled failure and load transfer mechanisms occur almost instantaneously. The breakdown of any individual component for any reason can result in window system failure.

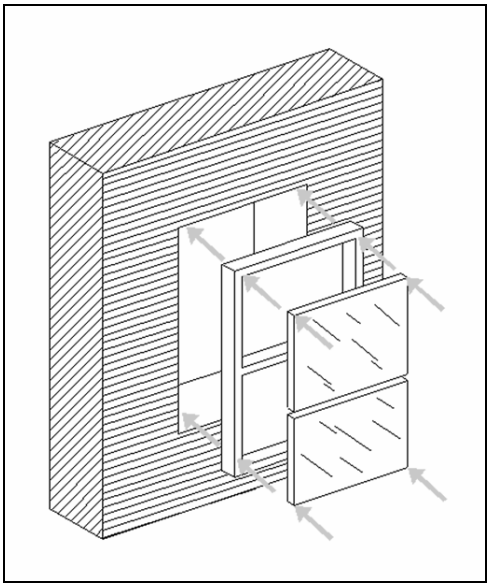

Figure 40. Blast load path through a window system.

It is worth emphasizing that the glazing must partially fail, in a controlled manner, in order to provide blast protection. If the glazing is too strong to fracture at all, it will transfer almost all of the blast load directly to the frame, anchors, and supporting structural elements. If those members are not designed to handle the transferred load, the result will be a catastrophic failure. If the glazing detaches as a unified mass it will be driven into the building with unstoppable destructive force (Smith and Renfroe 2005).

Glazing material selection

In protective glazing design, glass failure is quantified not in terms of whether breakage occurs, but whether it creates hazards for the occupants. Blast-resistant glazing must be completely interlocked in its frame and the frame must be securely anchored to primary structural members. The glazing must stay constrained in the frame after fracturing without allowing fragments to enter the occupied space. To provide more complete protection, even after fracture, the glazing should maintain closure of the building envelope in order to protect against pressure-related injuries and reduce cleanup costs (Norville and Conrath 2001).

Every blast window project has its own set of design constraints and requirements that will govern glazing material selection. The decision process involves protective considerations as well as first cost, daylighting, energy efficiency, and other functionality. Other considerations include the location and size of window openings as well as the type and density of oc-

cupancy. Given the wide range of potential constraints and requirements, different protective glazing materials may have to be selected for different parts of a single building (Smith and Renfroe 2005). The UFC categorizes glazing as *monolithic*, *laminated*, or *insulating*.

Monolithic

Most window systems use monolithic glass, which is a single flat piece of glass of consistent thickness. Monolithic glass is a generic term and may be used to describe a variety of glazing compositions fabricated using different material compositions or heating/cooling processes. The most widely used monolithic glazing in conventional windows is *annealed*, which is cooled slowly to transmit light with little distortion (Safety/Security Window Film 1999). Standard annealed glass fractures readily in a blast. Various manufacturing processes, such as heat treatment and thermal tempering, can be used to suppress fragmentation (Norville and Conrath 2001, Smith and Renfroe 2005). Monolithic glass alone does not provide satisfactory blast protection, but it may be used as a component of composite blast-resistant glazing.

Laminated

Laminated glass, originally developed for use in automobile windshields, is now a standard safety application for windows because it is engineered to hold glass fragments together after breakage. Laminated glass is made of two or more layers of monolithic glass bonded with a tough, thin interlayer of polyvinyl butyral (PVB) or other polymeric material. When laminated glass fractures, most of the fragments adhere to the PVB interlayer, providing effective protection to the building interior. The interlayer material is available in differing thicknesses for different levels of protection (Norville and Conrath 2001; Smith and Renfroe 2005).

Insulating

Insulating glass consists of two separated parallel panes sealed in a frame to maintain dead air space between them. The dead air space dramatically reduces thermal gains and losses through the glass. Some varieties of the product fill the space with an inert gas to further reduce thermal conductivity. Blast-resistant insulating configurations developed in recent years use laminated glass at least on the interior (or *inboard*) pane, which provides the required protection and blocks debris from outer annealed panes

(Norville and Conrath 2001; Smith and Renfroe 2005). Tests have shown that insulating units that use laminated glazing on the inboard pane provide greater blast resistance than single-pane laminated units.*

Glazing (B-3.1.1)

UFC paragraph B-3.1.1 addresses glazing standards for existing inhabited buildings with the required standoff distances. The requirements are triggered by any planned glazing replacement project (1-6.2.3). The use of laminated glass is required. A minimum of 6 mm (1/4 in.) nominal thickness is specified, which can be provided by two nominal 3 mm (1/8 in.) panes bonded together with a 0.75 mm (0.030 in.) PVB interlayer. For insulating units, the UFC requires that the inboard pane be a minimum of 6 mm (1/4 inch) laminated glass, but the outer pane need not be laminated.

Existing glazing in historic properties can be assumed not to be blast resistant unless it was specifically designed that way for the building's original use, as in a missile assembly building, for example. Similarly, it is unlikely that any reglazing project in a historic building introduced blast-resistance unless the reuse mission required it. Using replacement glazing in historic buildings is generally not a major historic preservation concern unless the specific reflective qualities of the original glass are important in preserving a building's historic appearance. As noted on page 94, tints and coatings are available to alter the visual qualities of replacement glazing if necessary to maintain a specific reflective quality.

> **Glazing — Replace Existing Glass.** This method involves simply replacing existing monolithic glass with UFC-compliant laminated glazing. Satisfactory performance can be ensured only if existing frame members, anchors, and supporting structural elements are UFC-compliant and work with the new glazing as an integrated system. This option is only feasible for existing window frames that are strong enough and provide sufficient frame bite (or can be effectively reinforced and channeled to accept the replacement glazing) (Lin, Hinman, Stone, and Roberts 2004).

* Edward Conrath, Protective Design Center, personal communication, 19 April 2006.

Window, Skylight, and Glazed Door Frames (B-3.1.2)

A properly specified window frame will restrain its glazing under blast loading so the pane does not detach from the frame. Therefore, frame members must be designed with enough capacity to resist loading equivalent to the breaking strength of the glazing. In other words, the framing system must be designed to resist the load that the glazing would transfer, up to its fracture strength. The UFC permits alternative frame designs if they can be verified to provide the required level of protection. Considering that framing elements are central both to blast-resistance and historic appearance, good framing design is critical to dual AT/HP compliance. With careful design and materials procurement it is possible to upgrade framing elements for blast resistance without unacceptable degradation of historic integrity.

Window profile

In the context of historic preservation, the primary and secondary framing elements that comprise the outline of a window in side view are referred to as the window *profile*. Window profiles typically reflect frame material composition and sash functionality. The material composition of framing elements is often evident in the massing of the window profile. Wooden window components, for example, need to be substantially larger than a metal component designed to support the same load. Profiles assembled with long, thin elements are likely to be metal or other material with a high strength-to-weight ratio. In a historic window replacement project, the replacement components would ideally be made of the same material as the original units. However, because wood sashes perform poorly in a blast, they are rarely an option for UFC compliance. When alternate materials must be used in place of the original wood, the form and appearance of the original window profile must be replicated in ways allowed by the SOI rehabilitation standards.

Mullions and grilles

Many historic windows are constructed with secondary framing members called *mullions* or *muntins*. Historically, mullions were structural members used to hold small, adjoining panes of glass together in a larger sash. However, in both past and current construction, mullions also may appear as a nonstructural, decorative feature to visually subdivide a larger pane of glass. Where authentic mullions are used, the small panes of glass they

hold behave more stiffly than larger panes of the same material and thickness, so the smaller panes may not break under pressures that would break larger panes. For that reason, authentic mullions in blast windows must have enough strength to accept a blast load from the glazing and transfer it through the sash to the supporting structure. Depending on the specific project, structural mullions strong enough to meet the minimum AT standards may be visually incongruous with historic window profiles.

To preserve the appearance of authentic mullions in a historic window replacement project, the most practical approach may be to specify a conventional blast-resistant window design with nonstructural decorative mullions, which many manufacturers call *grilles* (Hinman 2005). In blast-resistant applications, grilles are placed on the exterior face of the glazing to prevent them from entering the occupied space during a blast. In double-pane insulating glazing units, grilles may be mounted on either face of the outboard pane.

Sash operability

Sash operability is a significant consideration in antiterrorism design. The effectiveness of blast windows depends in large part on maintaining closure to reduce the occurrence of flying and falling debris. This requirement directly conflicts with operability, however, and various blast window systems eliminate operability.*

While fixed blast-resistant windows are the best alternative for blast resistance, the protective function of operable blast window units is eliminated when an occupant opens the window. However, the blast pressures associated with the UFC baseline explosive weights will rarely pose a serious threat to building occupants if blast-resistant windows are left open. Nevertheless, the loss of closure provides ingress for blast-propelled debris.

In general, designing multi-sash blast-resistant windows is difficult due to the frame and anchorage requirements of UFC 4-010-01. In double-hung units, for example, each sash connects to the main framing assembly by means of a unique track. This track is difficult to design for blast resistance, and it becomes further complicated with the addition of more oper-

* Fixed (inoperable) windows are obstacles for emergency response personnel (Smith and Renfroe 2005). Some UFC-compliant laminated glazing is penetrable with standard forcible entry tools (Stone 2003), but systems designed with different materials for heavier blast loads may be quite difficult for emergency personnel to penetrate.

able sashes. Furthermore, walls in historic buildings may not be thick or strong enough to meet track design requirements for multi-sash blast-resisting units. The wall's resistance to blast loads dictates the limitations on window anchorage alternatives, and that in turn dictates window type alternatives. Consequently, changes in window operability will often be necessary to match required anchorage to the available wall structure.

Although the SOI rehabilitation standards favor retaining historic operability in a replacement project, if that is not possible the project team can minimize visual impacts that result from changing window functionality. A properly selected casement-style blast window may be a suitable alternative for a historic double-hung window. Casement windows have simplified anchorage requirements and they can be manufactured to resemble double-hung windows in profile (Figure 41). Cultural resource personnel can support protective design engineers in selecting windows that replicate the appearance of historic sashes and shadow lines from a distance.

Figure 41. Casement window manufactured to resemble a double-hung unit (left). Challenges of incorporating new casement hardware into fenestration designed for double-hung units (right). The interior wall was carved out to provide clearance for the casement cranks and locks (DA 2005).

Frame Member Design (B-3.1.2.1)

The UFC defines framing requirements that will keep the glazing in place in an explosion. Window and skylight frames, muntins, sashes, door rails,

and stiles are to be steel or aluminum. An aluminum frame will usually be sufficient to meet the standard. However, in applications where the windows must be more robustly designed to compensate for inadequate standoff, steel frames may be required. Framing member design is to incorporate the specified material characteristics and to limit deformations under the specified loading (UFC paragraph B-3.1.2.1).

Most historic window and door frame stock does not have the correct properties for blast resistance. The UFC requirement for metal framing presents a preservation challenge for historic windows with wood frames. Due to differing thermal conductivity properties, the replacement of wood frames with metal can lead to condensation problems that may damage masonry walls. Such deterioration not only has an adverse effect on historic integrity, but may cause structural damage. To prevent destructive condensation it is important to provide a weather-tight seal between the windows and their rough openings, including flashing, while also designing for moisture egress. These necessary construction details must not interfere with blast-resistant anchorage hardware requirements.

Glazing Frame Bite (B-3.1.2.2)

As laminated glass deflects under blast loading, it will tend to pull out of its channel in the frame. For this reason, the UFC specifies how much a frame must overlap to adequately constrain the glass. This mechanical interlock is called *frame bite* (Figure 42).* Minimum frame bite requirements depend on whether the glazing is secured with a structural-grade silicone sealant. Frame bite requirements are lower when such sealant is used because it adds holding capability to the glazing wet seals or gaskets. Structural-grade sealant also is used to help affix larger panes, which deflect more than small ones under blast pressure, into the sash. The sealant is applied around the edge of the interior face of the glazing where it laps under the frame window frame. Sealant may be reapplied as necessary to ensure continued performance.

Most existing historic window, door, and skylight frames fall short of UFC-prescribed frame bite dimensions and will need to be modified or replaced. In the rare cases where existing frames meet all UFC requirements except

* Deeper frame bites can be used both to restrain relatively large panes of glass or as part of a system designed to provide higher levels of protection.

those for frame bite, it may be sufficient to address only the issue of glazing constraint.

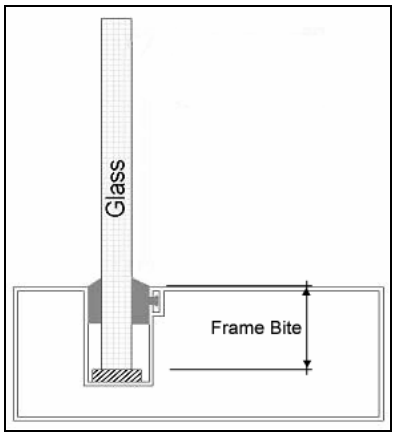

Figure 42. Diagram showing frame bite.

Glazing Frame Bite — Structurally Adhere Glazing to Unmodified Frame. For existing windows with a frame bite of 9.5 mm (3/8 in.) or greater, and that comply with all other UFC requirements, bond the glazing to the frame with high-strength silicone sealant.

Glazing Frame Bite — Increase Frame Bite. For existing windows that comply with all UFC requirements except for frame bite, increase frame bite depth to 9.5 mm (3/8 in.) and bond glazing to the frame with high-strength adhesive. Note that replacing existing monolithic glass with laminated glass may necessitate frame bite widening as well.

Conventional construction is not designed to resist bomb blasts, but only nominal loads such as dead load, live load, wind, and snow. Furthermore, standard windows are selected mainly to resist wind loading. When a blast-resistant window is being designed for an existing building, the first consideration is whether the building's structural system is sufficient to withstand the same design blast load for which the window is designed. The blast window will not protect occupants if it dislodges because the supporting structural wall fails or collapses (WinDAS 2.5 2001).

Some historic construction methods, building forms, and wall configurations are not strong enough for a blast window project. In such cases, structural strengthening and special-purpose window connections will be needed to comply with UFC 4-010-01. For example, historic unreinforced masonry walls will probably not to provide sufficient capacity to resist transferred blast loads, so suitable masonry reinforcement and attachment techniques would be needed (Hinman 2005).

Connection Design (B-3.1.2.3)

Window, skylight, and door connections are subjected to extreme stresses in an explosion. The connection hardware attaching window frames to the building superstructure is a critical link in blast load transfer (Figure 43). Much of the load is transferred from glazing and framing members through anchors into the adjacent superstructure. UFC section B-3.1.2.3 provides criteria for blast-resistant window anchorage to prevent system failure. If the anchorage fails, an intact window unit can become dislodged from the structure and implode into occupied space. UFC-specified static design loads for connections are based on the size of the vision area (exposed glazing). For purposes of connection design, the static design loads are applied to the glazing surface and all framing elements during analysis.

Figure 43. Window anchors in clay tile masonry (ENR 2003).

AT/HP conflicts related to connection design may arise where the building substrate at rough openings must be modified to accept connection hardware. Some openings may be unsuitable for the anchorage of blast window connection hardware because the material is not strong or thick enough. The area where wall cavities meet rough openings may be filled with loose or weak masonry material that lacks strength to frame and connecting

hardware in place during a blast. Similarly, rough opening surfaces may be too thin to accept anchorage hardware. These sorts of deficiencies will require reinforcement of the rough opening perimeter.

Connection Design — Grout Rough Openings. Even if the walls are determined to have sufficient strength and integrity, some structural preparation may still be necessary adjacent to the window opening to rehabilitate non-uniform conditions or structural soft spots. Where such treatment is needed around a window opening, high-strength grout may be applied to provide satisfactory substrate for window anchors. Ensure there is adequate grout depth and strength to withstand the stresses of hardware attempting to pass through the wall in an explosion. The grout may be applied by the method best suited to the specific conditions (e.g., hand-packing, troweling, injecting, or pouring). Some robust masonry anchors have built-in "grout socks" at the end of the anchor to conform to rough openings. These grout socks expand to fill wall voids as grout is pumped into them.

Connection Design — Metal Plate Rough Openings. This resolution involves embedding and attaching steel or aluminum channels in counterweight pockets or similar voids to finish out rough openings. The walls to which the plates are attached must be strong enough for the blast design load. Steel plating is then attached to the inside face of jambs, heads, and sills to reinforce the opening. In cases where window openings must be augmented with oversized or ill-fitting anchorage plates, these can be boxed out with matching wall material and integrated into the architecture, or concealed with compatible millwork.

Connection Design — Alternate Connection Surface. This resolution involves connecting the window frame assembly to the inside wall surface adjacent to the rough opening with purpose-built angle plates and connections. Because this resolution in-

volves alterations to interior wall surfaces, it is most appropriate for building interiors that lack historic significance.

Supporting Structural Elements (B-3.1.2.4)

One reason a blast window may underperform its own glazing specifications is substandard installation. For this reason, frames must be anchored securely to supporting structural elements. In UFC 4-010-01 the term *supporting structural elements* refers to the structural members to which the window system is attached. In buildings with load-bearing façades, the supporting structural element is the wall surrounding and forming the rough window opening. In non-bearing façades it is the system of curtain wall, girts, jambs, studs, sills, lintels, etc., that frame the opening.

The capacity and condition of the supporting structure directly affects blast window system performance. Less obviously, the type of blast window selected can affect structural performance. For example, given the same blast environment, energy-absorbing frame designs will transfer much less force to the supporting structural elements than a rigid frame system; the former may provide the required level of protection while the latter may concentrate and transfer loads that exceed the capacity of supporting structural elements in historic construction.

UFC paragraph B-3.1.2.4 addresses structural design capacities for supporting structural elements. Structural supports should withstand forces transferred to them from window anchorage hardware during an explosion. Because UFC 4-01-01 assumes that blast loads are likely to dissipate through multiple mechanisms, the design of any blast-resistant window solution need not account for the response of wall or roof elements in the remainder of the structure. If analysis shows that existing structural supports will withstand the UFC design blast load, but the window will not, then only the window system requires upgrading. However, if analysis shows that the existing structural supports will fail under the design blast load, then these must be strengthened. AT/HP conflicts may arise when new supporting elements are added to a historic structure.

Supporting Structural Elements — Add Structural Elements Around and Near Rough Openings. Where building interiors are not historically significant or where they have ample room to accept

the new additions, structural augmentation can be a simple matter. For clerestory window walls supported mostly by cantilevers, additional vertical bracing spanning floor to ceiling will probably be required. Curtain walls with narrow pilasters between window expanses may require supplemental vertical bracing at the pilasters. For even less robust wall systems such as those constructed of light-gauge metal studs, multiple stud framing along window openings is probably necessary (Hinman 2005). Where building interiors are historically significant or where space is at a premium, the addition of new structural supports is problematic. In masonry construction it may be necessary to remove one or more interior masonry wythes around the rough openings in the supporting wall and embed structural steel members to accept window anchorage. The displacement of masonry wythes with steel inserts is permissible only if the resulting wall construct supports all anticipated loads.

Supporting Structural Elements — Alternate Attachment for Substandard Rough Openings. In buildings with masonry walls that are uniformly too thin to provide adequate out-of-plane strength, alternate attachment methods may work. One approach is to anchor the window assembly to horizontal structural members, especially floor and ceiling diaphragms. To meet UFC 4-010-01 requirements, however, the horizontal members must provide sufficient capacities. Therefore, the method is not suitable for wooden horizontal members incorporated into a masonry structure because wood performs poorly in a blast. Alternate attachment designs require new structural elements near the windows to transfer blast loads from the window to the alternate load path (see previous resolution).

Mitigation (B-3.1.3)

Robust blast windows may be used as a protective design mitigation in existing buildings where the minimum standoff distances cannot be met.

UFC 4-010-01 requires that this mitigation provide building occupants a level of protection equivalent to that specified in UFC Table 2-1. This mitigation for inadequate standoff must be verified through analysis or testing.

Because historic districts often lack sufficient building separation and the prescribed standoff, window-related mitigation strategies under UFC paragraph B-3.1.3 may be the rule rather than the exception. Mitigation (as defined by the UFC) provides greater flexibility in meeting the requirements of UFC Standard 10. Mitigation strategies can be invoked regardless of whether the historic building satisfies standoff requirements or not. (It may be desirable to use an alternate design strategy to meet dual AT/HP requirements even when standoff requirements are met). Some alternate strategies for UFC Standard 10 compliance—with special focus on the preservation of historic window fabric—are presented below.

Mitigation — Reinforce Existing Historic Window Components. In cases where a limited number of highly decorative historic windows or glazed doors contribute an extraordinary amount of significance to a building, it may be feasible to disassemble those units and reconstruct them to meet UFC requirements. This resolution retains visible historic framing elements as aesthetic overlays to a new internal metal framing structure. The removed window units are disassembled and the frame members are grooved to accept laminated glazing. If the historic muntins are too small to strengthen, imitation muntins are attached to the outside face of the glazing as necessary to replicate the historic window appearance. Original framing members are structurally reinforced with steel or aluminum plates or channels to provide adequate strength. This resolution preserves original historic material to the maximum extent feasible and conceals the new armoring hardware from external view. However, the resolution is labor-intensive and therefore expensive. Nevertheless, the expense may be justified for properties and windows of extraordinary quality and historical significance. It should be noted that this resolution involves the introduction of nontraditional materials that could cause problems, such as conden-

sation, that must be anticipated and addressed in the design.

Mitigation — Secondary Window System (Interior Application). A secondary blast-resisting unit may be positioned inside the existing window system to create a protective barrier between the exterior and interior space. This approach prevents blast debris from entering occupied space (Lin et al. 2004). Secondary window connections must anchor securely to support elements of adequate capacity and must be independent of the historic window. There is no minimum clearance prescribed between the existing window and the added secondary window because it has no impact on blast performance. However, the design must allow for cleaning and maintenance of any space between the two. This type of system can work well with historic windows because it does not require modification of historic frames or glazing. Because it mounts inside the building envelope, there is little visual indication from outside that the windows have been modified. The system is conspicuous when viewed from inside the protected space though, so this mitigation may not be appropriate for interiors determined to be significant.

Mitigation — Secondary Window System (Exterior Storm). A secondary blast-resistant window system can also be installed on the exterior side of a historic window provided there is a smooth attachment surface. The exterior secondary unit must mechanically function independently of the historic window. This approach may not be appropriate for historic properties with significant exterior views, because exterior installation obscures the historic window. Also, the interior glazing must be deeply recessed from the exterior storm (approximately 1 ft) to provide enough deflection clearance for the exterior blast-resistant glazing. Few DoD buildings have thick enough walls for successful application. One perform-

ance and safety issue is the instantaneous pressure buildup in the air space between the two windows during a blast. That pressure will probably cause the historic window to fail catastrophically, creating a blast debris hazard. Therefore, this resolution also requires the installation of an interior blast curtain or barrier to contain the debris.* Also, provisions must be made for cleaning and maintenance of the interstitial space.

Mitigation — Secondary Window System (Alternate Attachment). This solution is similar to the interior secondary window application discussed above, but it provides a load path from the window to larger horizontal structural members by means of properly designed vertical braces that rise from floor to ceiling in front of the openings to be protected (Figure 44). For more information, see *Alternate Attachment for Substandard Rough Openings* resolution on page 110.

Figure 44. Window-flanking bracing transfers loads to floors and ceilings (PDC 2004).

* Blast curtains and similar products alone do not provide an adequate level of protection. In this resolution, the exterior storm window system takes the majority of the blast load, which reduces the velocity of debris entering the interior space. If blast curtains are left open they offer no protection.

Mitigation — Fabric Systems. These systems employ high-strength transparent fabric to stop debris from entering a building. Fabric is attached to flexible supports that can anchor into walls, columns, and floor slabs that have adequate strength for blast load transfer. It is essential that the support framework and its anchorage be flexible enough to relieve the fabric, supports, and building from undue stress during a blast. Suitable synthetic fabrics are available in a variety of strengths, colors, and textures. Aramid, high density polyethelene (HDPE), and phenylene benzobisoxazole (PBO) are typical materials (Crawford et al. 2000). It should be noted that HDPE weakens when exposed to heat. Also, PBO can underperform with extended ultraviolet (UV) exposure, and therefore it should be used only in combination with UV-blocking glazing. The fabric and support frame function as a unit to absorb energy and limit blast load transfer to the structure. The fabric is in plain view from the interior but virtually invisible from outside. The support framework can be installed to be completely visible or concealed by incorporating it into existing interior millwork, wall detailing, and finishes. Note that this resolution renders the covered window inoperable from the interior unless provisions are made to allow the fabric framework to hinge open for window access. Such hinges must be designed to withstand substantial blast pressures.*

The performance of a blast-resistant window to a specified level of protection can be assured only when the entire system (i.e. glazing, framing members, anchors, and supporting structural members) is successfully analyzed or tested in conditions identical to the intended field application. Therefore, when a mitigative design approach is used, analysis or testing is necessary to verify UFC compliance.

* Fabric systems should not be confused with blast curtains and sun shades, which generally lack adequate anchoring and must be paired with additional retrofits such as window films to provide adequate protection.

Window, Skylight, and Glazed Door Replacement Projects (B-3.1.4)

Although it may be possible to retrofit some historic windows to provide the required level of protection, in many cases the most direct route to UFC 4-010-01 compliance will be full replacement with a custom-designed blast window. UFC subparagraph B-3.1.4 requires all replacement windows, skylights, and door glazing in inhabited buildings to be glazed, framed, and installed to meet all UFC 4-010-01 specifications as a part of any planned window replacement project.

Window replacement projects unavoidably involve the removal of components that are likely to contribute to a building's historical significance. To minimize negative impacts, replacement window units should be designed for visual compatibility with the historic building by maintaining shadow lines, planar qualities, profiles, and the overall appearance of the historic sash. Today's window and door manufacturers tend to market "historically compatible" products in overly thin profiles made possible by modern, higher-strength building materials. These products may feature nonfunctional mullions and other details intended to evoke a feeling of nostalgia. However, such windows will not comply with the SOI rehabilitation standards to whatever extent they change scale or proportion compared with the original, or incorporate historically inauthentic design details.

Blast-resistant replacement windows use either rigid or flexible framing systems. Rigid systems perform very differently than flexible systems, which are designed to flex and deform under blast loading. This difference has significant implications for detailing and anchorage, which are often important considerations in historic buildings (Smith and Renfroe 2005).

Replacement Projects — Rigid Blast Windows. These typically feature laminated glass mounted in a stiff steel or aluminum frame. These systems are designed to hold the glazing in the frame in a blast, and they work by transferring most of the load to the building's structural members (as opposed to absorbing and dissipating the energy). Therefore, anchorage and attachment are extremely important design considerations (Lin et al. 2004). If this window type is not properly anchored into structural elements of sufficient strength, it is likely that the frame will partially or totally dislodge in a blast. Rigid blast windows can

be fabricated to complement various historic styles, and may be operable or inoperable. Casement-style units may be designed to replicate the look of double-hung originals.

Replacement Projects – Energy-Absorbing (Flexible Frame) Blast Windows. This style of blast window features an energy-absorbing aluminum frame that can be specified for historic compatibility. A deformation or collapse mechanism provides a designed path for blast energy dissipation (Figure 45). The designs use either aluminum alloy mullion sections or a stainless steel cable attached to an aluminum frame. Because the frame is designed to absorb energy through predetermined "crumple zones," it has less intensive anchorage requirements that may be suitable for historic walls that lack the strength to support a rigid frame system under blast loading (Lin et al. 2004). Some energy-absorbing systems have undergone extensive testing and are capable of performing to very high levels of protection (FPED 2003).

Figure 45. Flexible frame blast-resistant window with collapse mechanism at mid-window (Oldcastle-Arpal, not dated).

Replacement Projects – Self-Closing Operable Blast Windows. Self-closing blast windows are typically rigid systems that incorporate hinged operable sashes that tilt outward to open. The location of the hinged edge is selected on the basis of relative elevation of the baseline threat. To protect against bombs assumed to detonate at or close to grade, a hopper-style self-closing window would be used.* However, for windows located in wells below grade, a self-closing awning-style window would be specified. Building exteriors that include alcoves with unidirectional access may benefit from self-closing casement windows hinged on the edge located closest to the assumed direction of detonation. Regardless of hinge location, the self-closing window is designed to slam shut when hit with a blast wave. If this type of design is used, the governing design parameter is likely to be the capacity of the hinges from which the window rotates (Hinman 2005).

Replacement Projects – Mismatched Blast Windows for Tapered Walls. Some historic buildings were designed and constructed using tapered masonry walls that are thicker at the foundation than at the roofline. The taper has implications for blast window attachment methods and sash limitations. The lower portions of tapered walls may be thick enough for multi-sash blast windows, but the upper concrete or masonry sills may be too thin for sufficient anchorage (Lin et al. 2004). In such cases, single-sash casement or other hinged blast windows can be used at upper fenestration, and they may be outfitted with exterior grilles or otherwise designed to replicate the profile of the lower multi-sash blast windows.

Replacement Projects – Muntin Array Blast Windows. This window was developed by the U.S.

* Outward opening hoppers will collect precipitation unless the window is protected by exterior building features such as deep eaves or awnings.

Department of State. It combines rigid performance with large amounts of ductility and deflection as the muntin array casts a grid of support behind the glazed opening. These systems are constructed by backing a single pane of laminated glass with a grid of highly ductile welded steel tube muntins that appear to divide the glazing into small, individual lights in the same way as conventional muntins. The muntin array is anchored to adjacent structural members, but not to the glazing (Lin et al. 2004; Sunshine 2004). They help to keep the laminated glass in place while giving the window a more aesthetic architectural appearance. Like a rigid blast window it requires strong walls and connections. Muntin array units allow for the use of relatively light-weight laminated glass as compared with rigid-frame systems. This window type is especially suited to large window expanses where the interior steel muntin tubes and exterior-mounted non-functional muntins can be used to emulate historic multi-light window frame configurations. These windows are expensive, but they can be designed to provide even higher levels of protection than required by UFC 4-010-01.

Summary

Blast window projects involve the removal or alteration of existing building components, and in historic properties those components may contribute to a building's significance. Although conflicts with SOI Standard 2 on preserving historic character are unavoidable in some cases, there may be unforeseen historic preservation opportunities in a UFC-mandated window, skylight, or glazed door project. For example, it may provide the opportunity to reverse previous inappropriate treatments. There is no firm reason why military installations cannot reverse earlier historically incompatible undertakings by replacing them with blast-resistant solutions that properly fit historic window, skylight, or door openings and match the building's historic appearance. Although it is often not possible to retain historic material composition and operability, it is not difficult to specify designs that replicate the historic fenestration size, framing profile, muntin patterns, colors, and decorative features.

4 Electrical and Mechanical Design (UFC 4-010-01, B-4)

Electrical/mechanical upgrades and historic preservation conflicts

Modernization of mechanical systems is one of the most common rehabilitation projects in older buildings. This work may include installing new heating, ventilating, and air conditioning (HVAC) systems to comply with building codes, replace malfunctioning systems, or improve energy efficiency.

Historic military buildings will probably require modification of electrical/mechanical (E/M) systems to comply with UFC 4-010-01 even if they have previously been updated for code compliance. AT-related E/M rehabilitation of historic buildings can introduce new electrical, heating, venting, and cooling source components; dispersed distribution elements such as ductwork, registers, conduit, and their housings (Figure 46); and control components. The replacement of historically significant E/M components may be necessary for UFC compliance, but adverse impacts in those cases will be less common since E/M systems are often not character-defining features of a historic property.

Poorly planned rehabilitation projects can adversely affect significant architectural spaces, finishes, and features, thus diminishing the overall historic integrity of the building. Project teams should make every effort to avoid major E/M undertakings that would affect historically significant and highly visible architectural spaces. When pursuing an E/M rehabilitation strategy for AT compliance, project teams should first examine the least invasive methods for meeting UFC 4-010-01 requirements. When introducing new E/M infrastructure into historic buildings, new additions should be installed in secondary spaces such as attics, basements, service and storage rooms, closets, false ceilings and plenums, floor and wall cavities, or vertical chases. When these approaches are not feasible, every effort should be made to install new equipment and controls in spaces that have previously been rehabilitated or lack historic significance (Figure 47). New exterior E/M components should be placed at minor building elevations to avoid degrading historically significant exterior views.

Figure 46. Modern mechanical systems can negatively impact historic properties (ERDC-CERL 2005).

Figure 47. Ceilings dropped to accommodate new ductwork should be pulled away from historic fenestration. Historic radiators and operable windows and transoms should be retained (ERDC-CERL 2004).

Table 5 and Table 6 provide an overview of the E/M rehabilitation methods appropriate for compliance with UFC 4-010-01 Standards 16 – 21*, each of which is discussed in the text. Each method may address compliance with one or more of the UFC standards, as noted.

The methods presented in Table 5 apply to UFC Standards 16 – 18, which protect building inhabitants from chemical, biological, and radiological (CBR) agents. Those standards include provisions that deter and manage the introduction of CBR agents into a building by means of external (air intake) or internal release. They also allow for the installation of emergency air distribution shutoff switches to interrupt the distribution of airborne CBR agents.

Table 5. E/M rehabilitation methods for mitigation of CBR attacks.

Rehabilitation Method	UFC 4-010-01 Standards
Seal low air intakes & relocate on roof	Std 16
Seal low air intakes & relocate to higher non-roof locations	Std 16
Secure near-grade air intakes	Std 16
Surveillance of near-grade air intakes	Std 16
Filtration	Std 16
Move mailroom offsite	Std 17
Exhaust mailroom through roof	Std 17
Exhaust mailroom through secondary exterior walls	Std 17
Provide mechanical system controls	Std 17, 18
Increase mailroom security	Std 17

The rehabilitation methods listed in Table 6 apply to UFC Standards 20 and 21, which address blast-related issues. They include the bracing of E/M equipment to withstand a blast and the control of under-building access to deter aggressors from placing bombs beneath buildings.

* An additional UFC standard, Standard 22 on mass notification systems, is not addressed in the text.

Table 6. E/M rehabilitation methods for blast protection.[1]

Rehabilitation Method	UFC 4-010-01 Standards
Brace or reinforce existing overhead e/m equipment	Std 20
Brace existing overhead E/M equipment with high-strength netting	Std 20
Relocate overhead E/M equipment	Std 20
Relocate overhead E/M equipment to floor-based mount structures	Std 20
Enclose open crawl space	Std 21
Secure crawl space openings	Std 21
Secure utility tunnel access	Std 21
Monitor under building points of entry	Std 21

[1] Because requirements under UFC Standard 19, Utility Distribution and Installation, address comprehensive utility routing requirements and redundant E/M systems, rehabilitation methods for this standard are covered by resolutions in other standards.

Because of the variety of historic building and E/M system configurations, it is important for AT/HP project teams to be familiar with mechanical system types to understand the potential conflicts and resolutions. The most common systems found in older buildings are discussed below.

Mechanical system types

The purpose of mechanical systems is to provide comfort to building occupants through the control of building temperature, humidity, and airflow. Dedicated systems are also available to condition space as necessary for specialized environments such as computer laboratories, food service facilities, or volatile materials storage areas. Each configuration has its own set of advantages and disadvantages in terms of AT/HP compliance. A poorly installed mechanical system can have a negative impact on historic building integrity and interfere with the objectives of UFC 4-010-01. Understanding the advantages and disadvantages of each type of system can help produce positive results in balancing AT/HP requirements.

Water systems

Water, or *hydronic*, mechanical systems consist of boilers for heating water, chillers for producing chilled water, a network of distribution pipes, temperature delivery outlets, and controls. However, they do not provide a means for ventilation. There are three primary means of delivery in hydronic systems: *radiators*, *fan coil units*, and *radiant panels*.

Fluted cast iron radiators are a common sight in buildings of the late 19th and early 20th centuries (Figure 48). More modern radiators are manufactured in floor-, wall-, and ceiling-mounted varieties as well as baseboard and convection styles. Radiators are typically positioned under windows and along outside walls where heat loss or gain is likely. Conditioned water or steam is piped to radiators as illustrated in Figure 49. Radiator position in a circulation pipe loop can affect its performance and required size.

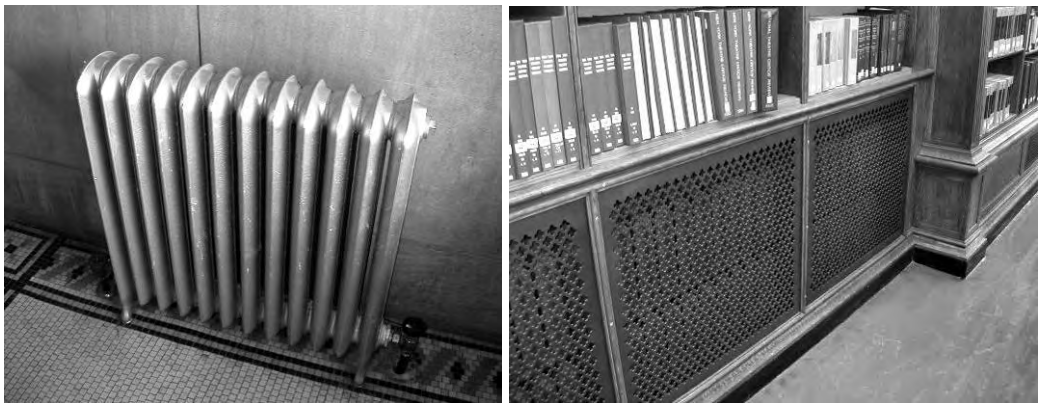

Figure 48. Cast-iron radiators can be left exposed (left) or encased in cabinetry (right) (ERDC-CERL 2005).

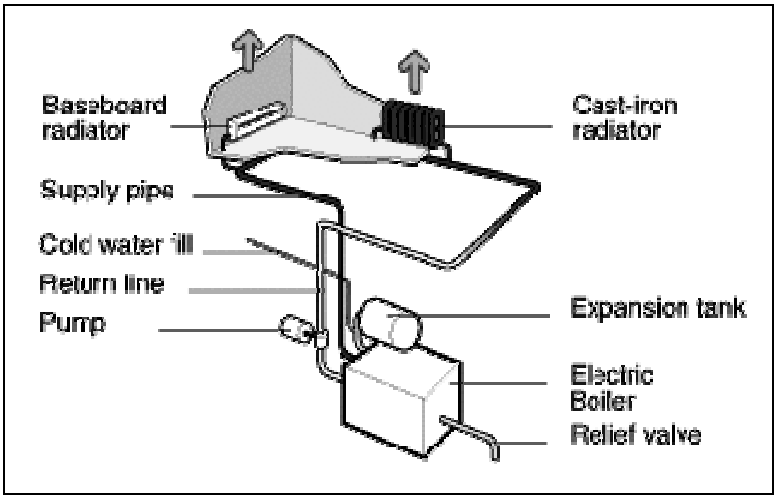

Figure 49. Radiator loop system (Hayden 1996).

Fan coil technology was patented in 1932 but did not gain wide acceptance until the 1940s and 1950s (Arnold 1999). Fan coil units are terminal units, not looped in a series, that can be individually controlled. A fan blows air over coils serviced by warmed or chilled water to heat defined space. These units may be housed in a cabinet or designed in other configurations (Figure 50). Today, low floor cabinet units (coils run in vertical direction) are commonly found under hotel room windows, offering individual con-

trol by room occupants. Tall vertical cabinets are available for use where floor space is limited. Ceiling units (coils run in horizontal direction) are frequently hung in basements and utility areas. Non-cabinet cassette units are also available for installation into furred ceilings or custom cabinetry.

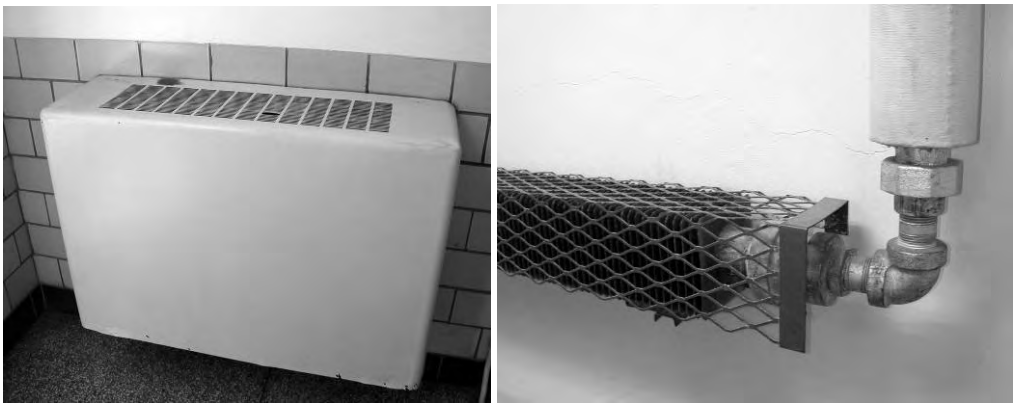

Figure 50. Two types of fan coil unit (ERDC-CERL 2005).

Examples of radiant heating and cooling were developed by pre-industrial societies, but the technology was popularized by the developer William Levit during the housing construction boom following World War II (Springer 1993). Radiant climate control uses hot or cold water circulating through pipes embedded in floors, walls, or ceilings. The delivery of heating or cooling is quiet, efficient, and evenly distributed. Most mid-20th-century systems featured steel or copper water pipes embedded in concrete floor slabs. Because metal pipes tended to corrode in place over time, modern radiant panel systems use polymer circulation pipes. Modern systems are also available with wall and ceiling radiant panels.

Table 7 summarizes the inherent advantages and disadvantages of hydronic heating and cooling systems in terms of performance, AT standards compliance, and historic preservation issues.

Table 7. Advantages and disadvantages of water systems.

System or Appliance		Mechanical System Performance	AT Standards Compliance	SOI Standards Compliance
Radiators	Pros	Clean operation; Easy, flexible piping installation; May be zoned	Closed system that is tamper resistant & prevents spread of CBR agents; Requires dedicated ventilation	Historic radiators can be reconditioned for use with upgraded boilers/chillers/pumps; Pipes are smaller than ducts so they take up less space, can be hidden in the architecture & have less impact on historic fabric
	Cons	Risk of leaks or burst pipes in walls if not maintained; Relies on architectural features or dedicated ventilation system for fresh air	May require equipment bracing; May require dedicated ventilation & exhaust	None if historically compatible
Fan Coil Units	Pros	Clean operation; Units have individual controls; Easy, flexible piping installation; May be zoned	Closed system that is tamper resistant & prevents spread of CBR agents; Requires dedicated ventilation	Some units can be concealed in ceilings, furred areas & cabinetry; Pipes are smaller than ducts so they take up less space, can be hidden in the architecture & have less impact on historic fabric
	Cons	Condensate pans can overflow if not maintained; Fan coils may be noisy; Risk of leaks or burst pipes in walls if not maintained; Relies on architectural features or dedicated ventilation system for fresh air	May require equipment bracing; May require dedicated ventilation & exhaust	None if historically compatible
Radiant Panels	Pros	Quiet, clean, uniform heating/cooling; May be zoned; Takes up little space with no ducts or terminal units	Closed system that is tamper resistant & prevents spread of CBR agents; Requires dedicated ventilation	Flexible piping or distribution nets can be attached to or concealed in existing historic floor, wall & ceiling assemblies
	Cons	Slow response time; Risk of leaks or burst pipes in panels if not maintained; Can limit use of floor, wall & ceiling fixtures; Relies on architectural features or dedicated ventilation system for fresh air	May require dedicated ventilation & exhaust	None if historically compatible

Air systems

Gravity air systems are products of the mid-19th century. They are found in unducted and ducted varieties. These systems provide heat only, not chilled air. Although their methods of air distribution differ, both unducted and ducted applications use a large, central furnace for heating air but do not include machinery to circulate the air. The term “gravity system” is a misnomer because the heat rises through the building due to convection, not gravity. In these systems gravity comes into play as the cooler, denser air in the conditioned space settles to the lowest level. An unducted gravity system relies on heated air to rise through large floor and ceiling grilles to all stories of a building. The grilles are staggered in plan so the heated air must pass through a room laterally before continuing to rise to the next story. A ducted gravity system distributes heated air to individual rooms through a series of vertical flues and horizontal ducts. The ducted system is often referred to as an “octopus” for the multiple ducts emanating from the central furnace. Gravity systems are very inefficient, and most have been replaced with modern mechanical systems that provide both heating and cooling (Park 1991, The Old House Web).

Nineteenth-century ducted air systems are a precursor of combined forced-air heating and cooling systems. Forced air systems feature ducts and mechanized air-handling components that allow for highly controlled air distribution and pressurization. Forced air systems can be designed to heat, cool, and ventilate in any combination. Depending on functionality, these systems typically consist of a furnace with integrated air handler, evaporator coil and condenser, ductwork and registers, and controls. The furnace provides heat and acts as the blower for the system. The evaporator coil and condenser provide cooling. Central air conditioning systems are available in two types: integral and split. All mechanized components of the integral system (compressor, condenser, evaporator, and fans) are contained in a single unit. The unit may be located outside the building with its cold air ductwork extending into the interior, or it may be located inside the building with its exhaust air ducted to the outside. In a split system, the compressor and condenser are located outside the building and the evaporator coil is inside, attached to the output side of the furnace. The interior evaporator is connected to the exterior condenser by supply and return refrigerant lines. The refrigerant carries heat away from the evaporator coil, making it very cold. The air handler blows air over the chilled coil, which removes heat from the air and delivers cooled air to the duct system. The ducts are usually fabricated from sheet metal or flexible plas-

tic. The blower and ducts can be used without conditioned air to ventilate interior spaces. Controls vary in sophistication to manage temperature, air pressure, and conditioned zones (Park 1991, The Old House Web).*

Table 8 summarizes the advantages and disadvantages of air systems.

Table 8. Advantages and disadvantages of air systems.

System or Appliance		Mechanical System Performance	AT Standards Compliance	SOI Standards Compliance
Unducted Gravity	Pros	None, outdated	No mechanized air movement	Preserves original mechanical system
	Cons	Heat only; Inefficient, uneven distribution of warmed air; Relies on architectural features or dedicated ventilation system for fresh air	Floor/ceiling grilles allow for unimpeded circulation of CBR agents	May require dedicated ventilation & exhaust
Ducted Gravity	Pros	None, outdated	No mechanized air movement	Preserves original mechanical system
	Cons	Heat only; inefficient distribution of warmed air; Relies on architectural features or dedicated ventilation system for fresh air	May require dedicated exhaust	None if historically compatible
Forced Air (HVAC)	Pros	High level of temperature & air pressure control; Provides ventilation; May be zoned; Humidification, dehumidification & filtration add-ons available; Small air handlers are quieter	Allows for pressurization of select spaces; Filtration available; Multiple smaller units can be zoned to mechanically isolate vulnerable areas	Zoned units can be relatively small & well concealed; Extensive ductwork can be successfully installed in historic buildings with highly modified or non-historic interiors & with configurations that allow ductwork to avoid significant spaces; Centralized air handling can be located outside historic buildings in outbuildings or utility vaults
	Cons	Large air handlers are noisier; Need regular balancing for even air distribution; Dries air & spreads dust	Vulnerable to airborne contaminants	Bulky & extensive ductwork can negatively impact historic aesthetics & may cause substantial physical damage to historic fabric

* Ducted forced air systems may use a heat pump instead of a furnace. The heat pump operates like an air conditioner, but can provide heat as well. Aside from its method of generating hot and cold air, the heat pump/air system is similar to the basic forced air system described above.

Combined air/water systems

Air/water hybrid systems are often used in rehabilitation projects because they can make use of existing mechanical infrastructure and offer the advantages of both systems. The smaller components of water systems are easy to install and air units offer increased performance and control of the ducted portions of the system. This creates a zoned scheme in which a central boiler and chiller can service multiple small air handling units (similar to fan coils) located throughout a building. Alternatively, if there is only one air handling unit, all heating and cooling components may be located in an outbuilding or exterior vault. In those designs, only conditioned air is delivered to the building (Park 1991).

High-velocity systems

Some older buildings can be upgraded with central air conditioning and heating ducts without the cost and difficulty of adding extensive ductwork. High-velocity (HV) systems are well suited to historic buildings because they require no removal of large sections of walls, floors, or ceilings. Neither do they require the installation of unsightly chases. Alterations are minimized by using small-diameter ducts that can be easily threaded through floor, ceiling, and wall cavities. HV systems use special fan coils and air handling units that generate high-pressure air forced through small-diameter ducts. They may use standard outdoor condensing units for air conditioning and heat pump systems, or else water coils can be mounted in air handling units for boiler heating or chilled water cooling. Alternatively, adding a bank of electric heating elements to the air handler can provide heating.

Table 9 summarizes the advantages and disadvantages of combined air/water and high velocity systems in terms of system performance, AT standards compliance, and historic preservation.

Table 9. Advantages and disadvantages of combined air/water and high velocity systems.

System or Appliance		Mechanical System Performance	AT Standards Compliance	SOI Standards Compliance
Combined Air/Water Systems	Pros	Combines assets of both systems	Combines assets of both systems	Can result in less intrusive pipe runs in historic spaces & more intrusive duct runs in non-historic spaces if properly implemented
	Cons	Combines liabilities of both systems	Combines liabilities of both systems	Can result in less intrusive pipe runs in non-historic spaces & more intrusive duct runs in historic spaces if poorly implemented
High Velocity Systems	Pros	High level of humidity control; Air mixing at outlets ensures draft-free room; Sound attenuation techniques quiet airflow; Typically requires only one return vent per building rather than one for each room	Shares assets with forced air systems	Minimizes alterations to historic fabric
	Cons	Higher velocity air movement means greater stress on mini-ducts; Smaller ducts require more powerful air handler	Shares liabilities with forced air systems	Improper placement of plastic collar fittings at outlets where conditioned air enters the room can degrade historic interior integrity

Other mechanical systems and appliances

Smaller mechanical units are often used as a supplementary temperature control source, or as the sole heating and cooling source in small or infrequently used buildings. These units primarily service the space in which they are located, with only incidental heating or cooling in adjacent areas. Self-contained heating sources include electric wall, electric baseboard, and portable radiant space heaters. An example of a self-contained cooling appliance is the portable air conditioner installed in the building envelope, either through window openings or dedicated wall openings. In addition to the self-contained systems, there are some less widely used whole-building cooling systems such as absorption cooling, evaporative cooling, and whole-house attic fans that can eliminate the need for air conditioning in smaller buildings.

CBR threats and impact

Although most of UFC 4-010-01 addresses blast protection for building occupants, the standards pertaining to electrical and mechanical systems specifically address attacks with CBR agents. The most prominent incidents in recent years were the 1995 rush hour release of sarin nerve gas in a Tokyo subway and several anthrax attacks in the United States during the fall of 2001.

A CBR attack on a building is capable of seriously disrupting mission-essential operations. Decontaminating a stricken building can require long and expensive rehabilitation work before interrupted missions can continue onsite (Janus and Rudolph 2003). When the 1 million square-foot Hart Senate Office Building in Washington D.C. was closed after anthrax contamination in 2001, offices had to be stripped bare to the concrete floor; plaster walls and interior partitions and ceilings had to removed temporarily in order to neutralize contaminants. Ensuring the safety of the building's HVAC components further delayed reopening of the building. The basic Hart Building CBR remediation project took approximately 2 months to complete, and an additional 3 months were necessary for general cleaning (Babcock 2003).

There are not yet any standard countermeasures for CBR attacks on buildings. The most effective current AT measures for this threat are a thorough understanding of how CBR agents may be delivered to a building and a realistic assessment of which types of attack are the most likely on a specific building (Janus and Rudolph 2004). UFC 4-010-01 provides some basic guidance on how to reduce the likelihood of a CBR attack and minimize the effects if one is carried out.

Properties and detection of CBR agents

CBR threats are posed by chemical-warfare agents, industrial chemicals, microorganisms, toxins, irritants, and radioactive materials. The hazard from each varies in terms of toxicity and persistence. Some radiological and biological agents can remain hazardous for decades (Blewett 2004).

Effective, automated CBR detection technology for building ventilation systems is not yet available. Radiological agents are the most straightforward to detect and identify in real time (Blewett 2004) because radiological detection technology such as the Geiger counter is mature and reliable.

Chemical agent detection technology is currently limited by shortcomings in response time, false alarms, maintenance, and the wide variety of agents that must be detected. Some technologies, such as infrared-based detectors, are advancing but still have many limitations. No reliable detection technology is yet available for real-time identification of biological agents (Miller 2002), and significant development time will be required before experimental technologies will emerge from the laboratory into the market (Janus and Rudolph 2004).

Probability of CBR attack

Military chemists evaluated availability, toxicity, and ease of delivery when preparing for attack with toxic chemicals in World War I. The same criteria could be applied today to determine which agents and delivery methods would be most readily used in an attack. Toxic industrial chemicals are sold, used, and transported in virtually every city, so it may be assumed that they would not be difficult for a terrorist to acquire. Also, radioactive materials are widely used in medical procedures and industrial applications. Stealing small quantities of radioactive agents may not be difficult, but obtaining large quantities would be more challenging. It is difficult to make highly toxic nerve agents and to acquire their precursors. It is also difficult to produce weaponized biological agents, although the anthrax attacks of 2001 demonstrate that it is possible to do so (Blewett 2004).

Because of the difficulty of producing or acquiring the most lethal and persistent CBR agents, a serious CBR attack is considered less probable than a bomb attack. However, even though the probability is relatively low, the consequences of a CBR attack on building occupants can be as severe as the effects of an explosion (Blewett 2004).

Buildings as highly desirable targets for CBR attacks

Buildings are considered highly desirable targets for terrorists, and are also extremely susceptible to CBR threats. Many structures provide terrorists with settings that contain large numbers of potential victims at predictable times. Furthermore, some buildings are particularly enticing to certain aggressors because they contain categories of individuals whose death or injury would be especially disruptive or demoralizing. In our free society, many public and semipublic spaces are open to observation by aggressors. This enables perpetrators to conduct inspections necessary to

discover the inherent weaknesses of a building, and thus deliver an attack that exploits those vulnerabilities (Janus and Rudolph 2004).

CBR agents are at their deadliest within an enclosed space, and therefore buildings are highly desirable targets for such an attack. If released outdoors, wind and sunlight normally minimize the impact of such substances, quickly diluting their potency to non-lethal levels. Buildings, though, not only keep such toxins concentrated for long periods, their mechanical and ventilation systems can help distribute them throughout the entire structure (Janus and Rudolph 2004). UFC 4-010-01 standards for E/M design attempt to address some shortcomings of existing systems. It is worth noting, however, that some historic mechanical systems are not as vulnerable to CBR attacks as newer all-inclusive HVAC systems.

It is relatively easy to introduce CBR agents into a building by means of transportable and seemingly innocent delivery mechanisms. Examples include aerosol sprays, or small vials of deadly materials that can be hidden in a briefcase or package without much difficulty. In fact, all CBR attacks begin with the agent in a container. The container may range in scale from a tanker truck to a pressurized cylinder, chemical artillery shell, or jar (Blewett 2004). Even an envelope in the U.S. mail can and has been used to transport CBR agents into buildings, as was evident with the anthrax attack in 2001.

HVAC systems and CBR exposure

Ventilation systems are used in buildings for a variety of reasons, primarily to provide heating, cooling, and humidity control for occupant comfort. Ventilation and air distribution are critical with respect to the introduction of CBR agents into buildings, their movement within buildings, and their subsequent removal. However, ventilation and air circulation can have either positive or negative impacts with respect to a CBR attack (Persily 2004).

On the positive side, ventilation systems can reduce the levels of these agents through dilution with outdoor air (assuming the outdoor air is agent-free). They can carry air to filters and air-cleaning equipment, which can remove or significantly dilute the concentration of contaminants. Ventilation systems can also be zoned to create pressure differences between adjacent zones, thereby isolating potentially contaminated areas from other spaces. For example, a ventilation system can keep mailrooms, load-

ing docks, and public lobbies (i.e., more vulnerable spaces) at lower pressures than regularly occupied office space elsewhere in a building. If a release does occur in one of these low-pressure locations, pressure differences will greatly diminish contaminant movement into higher-pressure office space (Persily 2004).

Ventilation can also have negative impacts on CBR agent transport. For example, CBR agents that are released outdoors can be brought into a building via outdoor air intakes or via envelope leakage induced by lower relative pressures in the building. Also, ventilation systems can effectively and quickly distribute agents within buildings if forced airflow patterns are not optimized to minimize contaminant exposure.

The impact of ventilation is strongly dependent on the layout of a building and the design and performance of its ventilation system (Persily 2004). A number of ventilation strategies exist to limit the impact of CBR events in buildings. While none will provide complete protection against all challenges, increasing the degree of protection is still worthwhile (Persily 2004).

Defense schemes

Although UFC 4-010-01 addresses only one explicitly, there are four primary defense schemes available to minimize CBR risks in buildings: *containment*, *filtration*, *removal*, and *evasion*. These schemes can be carried out in either continuous or standby mode. For continuous mode, defensive mechanisms are in constant operation; in standby mode, the protection is activated by a building occupant or system during an event. Regardless of mode type, CBR defenses generally rely on one or more of the four tactics above (Janus and Rudolph 2004). Since UFC 4-010-01 specifies the minimum level of protection, it requires that only the first tactic, containment, be implemented in high risk areas such as mailrooms (UFC Standard 17). The other three tactics described here may be used as additional recommended measures or as mitigation when UFC Standard 16 relating to air intake location can not be implemented due to existing building constraints.

Containment

The objective of containment is to minimize the spread of contaminants by confining agents within a specific section of a building. It is particularly

useful in managing high-threat and vulnerable areas, or portions of buildings (Janus and Rudolph 2004). Vulnerable spaces are those where it is easier to release agents into a building, such as mailrooms, loading docks, and public reception areas.

Containment can be accomplished by keeping vulnerable spaces at a lower pressure than adjacent spaces, as described previously. A dedicated air-handling system for at-risk spaces simplifies matters considerably. However, achieving effective containment and isolation also requires ample consideration for airtightness of the vulnerable space and the boundaries the space shares with the rest of the building. Additional isolation/containment concerns include weather-related pressure differences and the operation of other ventilation systems within the building (Persily 2004). This tactic is required by the UFC under Standard 17, Mailroom Ventilation, for the isolation of CBR agents within mailrooms. In buildings that require higher levels of protection, it may be prudent to expand its use to other building spaces that are vulnerable due to frequent visitors or deliveries, such as lobbies and storage areas that are serviced by loading docks.

Filtration

The purpose of filtration is to exclude CBR agents so they do not permeate the mechanical system by infiltration, surface contact, or other means (Janus and Rudolph 2004). As stated previously, filtration technologies may not remove all CBR agents. Three common types of filtration elements in use today are high-efficiency particulate air (HEPA) filters, high efficiency filters, and activated carbon filters.

Implementation of filtration in combination with other mechanical system-related safeguards will reduce the likelihood of mass casualties and contamination of a facility through the introduction of biological and/or chemical agents in the outside air stream (Miller 2002). This tactic is not mentioned in UFC 4-010-01, but can be employed as an added layer of protection against CBR attacks. A quality filtration system can also be highly effective in situations where it is impractical to relocate existing air intakes above ground level in compliance with UFC Standard 16 (see *Filtration* resolution on page 140).

Removal

Removal involves equipment and procedures normally used to evacuate smoke from enclosed spaces. It minimizes the spread of a contaminant by rapidly removing the agent from within the building envelope following its release (Janus and Rudolph 2004).

The removal tactic uses exhaust fans or a dedicated ventilation system to remove airborne hazards. Its effectiveness depends on location of contaminant and time of release. If a CBR agent has been identified immediately upon release and has not had a chance to permeate the entire building, removal should not be employed. Exhaust fans can cause the quick spread of contaminates throughout the building to unaffected zones (FEMA 426). Removal may be a valid tactic if there is knowledge that CBR agents have already migrated throughout a building and therefore can no longer be adequately contained. Although the use of exhaust fans is critical to maintaining slight negative pressures in mailrooms, their use for removal is not explicitly covered by UFC 4-010-01.

Evasion

Evasion is analogous to an evacuation that is sometimes ordered before a hurricane. The purpose is to direct building occupants to a safe haven within a structure or by taking them out of a building until the extent of contamination can be determined. Evasion techniques can be used alone or serve as a preliminary precaution before activating the other methods discussed (Janus and Rudolph 2004).

The creation of a safe haven inside a building requires dedicated ventilation, airtight interior partitions, and in some cases local air cleaning systems so occupants can congregate safely during a CBR release. A safe haven can be very effective when occupants are notified early in an event. However, notification procedures must include provisions to determine when the agent has been cleared from the building and it is safe to leave the refuge (Persily 2004). Mass notification systems (UFC Standard 22) can be used for this purpose.

Protecting building occupants from CBR threats

New and renovated buildings usually have forced air mechanical systems or forced air ventilation components running in combination with other

climate control systems. These buildings are vulnerable to air intake attacks, as are historic buildings outfitted with more modern HVAC systems. Historic buildings that still use original architectural features such as transoms and passive vents to introduce and circulate outdoor air to building interiors are susceptible to airborne contaminants, but generally not to the same extent as buildings with mechanical air handling. Ducted forced air systems are as effective delivering concentrated airborne contaminants to occupied space as they are delivering conditioned air throughout the building. Historic buildings that lack adequate air exhaust are vulnerable in different ways, however.

Airborne CBR agents can enter facilities by external or internal release. External releases can be initiated remotely from directed plumes originating from standoff, or from omnidirectional aerial release (UFC 4-011-01 [draft]). UFC 4-010-01 addresses direct releases into buildings, not more remote modes of release. Of specific concern are external releases through outside air intakes and internal releases initiated through mail delivery, direct release within a building area, or insertion into the building ventilation system.

One critical assumption in UFC 4-010-01 design strategies for combating airborne contamination is that agents will be delivered into buildings from either outside buildings or at delivery points (i.e. mailrooms) within buildings. Based on this assumption, the primary design strategy for deterring aggressors from successfully launching a CBR attack is to provide control and screening to ensure that agents are not introduced into buildings in the first place. The second-line strategy is to design building elements and support systems to ensure that CBR agents introduced into buildings do not spread to uncontaminated areas. Note that none of the UFC design strategies include automated detection equipment because that technology is still in experimental development (UFC 4-011-01 [draft]).

It is important to understand the impact of AT mechanical retrofits to an established HVAC system. Airflow effects must be thoroughly understood before any design modifications are implemented. Without a mechanical engineering analysis and validation, some modifications may degrade system performance and put occupants at risk. Additionally, protective design changes to the HVAC system must not degrade indoor air quality or occupant comfort under normal operating conditions (Persily 2004).

Air intakes (UFC Standard 16, B-4.1)

The fresh air intake component is the exterior/interior interface of an HVAC system. It may be located below grade on an exposed basement wall or in a utility well; at grade on an exterior wall or a freestanding slab; above grade on an exterior wall; or on the roof. Any air intake is a potential route for direct insertion or release of CBR agents, but accessibility is a primary factor in determining its level of vulnerability. Unprotected air intakes located below or near grade are most vulnerable. Intakes located high on the exterior wall or on the roof are more difficult to access and therefore are considered safer against direct CBR releases (Figure 51).

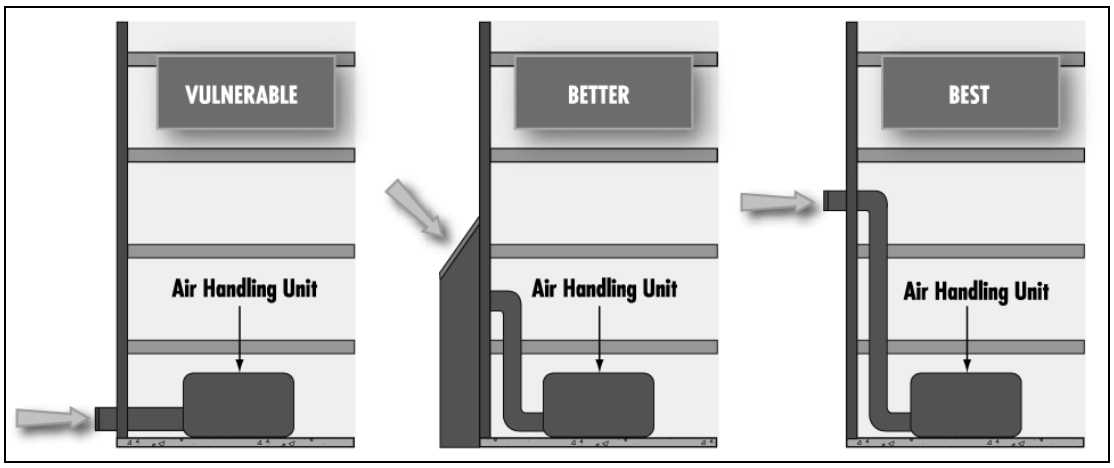

Figure 51. Protecting air intakes (CDC/NIOSH 2002).

UFC 4-010-01 requires that all air intakes be located at least 10 feet above grade for new inhabited buildings. This requirement is recommended, but not mandatory, for existing inhabited buildings covered by the UFC. The following two measures involve sealing existing near-grade air intakes and locating new intakes at least 10 feet above the ground per UFC Standard 16. AT/HP conflicts will likely involve the introduction of mechanical components where none had existed before and building modifications to accommodate the new air intake configuration.

Air Intakes — Seal Low Air Intakes and Relocate to Roof. One way to comply with UFC Standard 16 is to remove or abandon near-grade air intakes, seal their openings on the building envelope, and relocate existing or place new air intakes on the roof. This resolution will involve changes to the interior mechanical layout as components and ducts are

added, removed, or rearranged to accommodate new air intake locations. Air intakes should be relocated to inconspicuous roof elevations to avoid detracting from the building's historic character. Roofs with parapet walls may be well suited to conceal air intakes. Roof configurations that do not provide for complete concealment may make it difficult to comply with the SOI standards. In those cases, air intakes should be moved to roof locations at minor or secondary building views. This resolution generally requires some degree of structural analysis to determine whether the roof will provide adequate support for new equipment dead loads. A low platform may be constructed to transfer new loads directly to roof beams and minimize disturbance of roof membranes during installation.

Air Intakes — Seal Low Air Intakes and Relocate to Higher Non-roof Locations. This strategy involves moving intakes 10 feet or higher on or adjacent to a wall. It assumes the building floor plan and structure will accommodate the intended relocation of air intake equipment. In cases where higher building locations can not house fresh air intake equipment, components can be mounted on limited-access full-height (10-foot) independent frames that are securely anchored adjacent to the building. This resolution requires changes to the interior mechanical layout to accommodate the new air intake locations. As with the roof relocation strategy, care must be taken to position relocated air intakes at inconspicuous building elevations so the introduction of hoods, vents, or framing on the building exterior do not detract from the overall historic character of the building exterior (Figure 52).

Figure 52. Air intakes can be integrated into existing upper level architectural features such as a window (ERDC-CERL 2005).

Air intakes located near grade in existing buildings also can be protected using the three strategies discussed below. These resolutions do not raise the elevation of the air intakes, but provide alternatives if relocation is not feasible. They are not mandatory under UFC Standard 16 for existing buildings but nevertheless improve protection for occupants. AT/HP conflicts will likely involve the introduction of security enclosures or surveillance equipment where none was previously installed.

Air Intakes — Secure Near-grade Air Intakes. If relocating near-grade air intakes is not feasible due to existing mechanical system layout, access can be limited by installing security enclosures around air intake equipment. Enclosures should consist of 10 foot solid walls surrounding each intake. They can be topped with sloped bird screens to keep objects out of the inlet. Illumination of enclosures for nighttime surveillance provides additional security (Miller 2002, Persily 2004). This strategy is generally acceptable when intakes are located on minor building elevations, but not for properties with air intakes situated on conspicuous building elevations. The introduction of high enclosure walls that detract from the historic integrity

of the building may require mitigation in the form of HABS/HAER documentation.

Air Intakes — Surveillance of Near-grade Air Intakes. Monitoring the area around near-grade intakes with surveillance cameras or alarms is recommended, but not required. Surveillance equipment and alarm systems can detect unauthorized people loitering near inlets so they can be greeted by security personnel or watched. Cameras, sensors, and alarms can be concealed among various building and site features (e.g., under eaves or inside light fixtures) causing no significant conflict with the SOI standards.

Air Intakes — Filtration. This alternative may be effective in combination with the other AT measures. Increasing the level of air filtration can provide an additional line of defense against various CBR agents. Three major types of filters suitable for CBR filtration are described below. Supplemental hybrid filters are also available (Miller 2002). In general, the addition of filtration systems to air intakes will have little impact on the integrity of historic properties.

High-Efficiency Particulate Air (HEPA) Filter — The HEPA filter is used for nuclear contamination, asbestos abatement, surgical facilities, computer rooms, and other areas with special filtration needs. HEPA filtration systems can effectively remove biological and radiological agents and should be run in a continuous mode (Miller 2002, UFC 4-011-01 [draft]).

High-Efficiency Filters — High-efficiency filters are a cost-effective alternative to HEPA filters when very high filtration of submicron particles is not required. They cost less and typically require less retrofit work to add them to an existing air-handling system (Miller 2002). Like HEPA filtration systems, high-efficiency systems should be run in a continuous mode.

Activated Carbon Filter — Activated carbon adsorbs (attaches to by chemical attraction) airborne odors and vapors. This filter affords a high degree of survivability against most known chemical and biological agents (Miller 2002). As the name suggests, this filtration system does not run continuously but rather is activated in response to a specific threat or heightened force protection condition (UFC 4-011-01 [draft]).

Mailroom ventilation (UFC Standard 17, B-4.2)

Conventional building ventilation systems handle indoor air pollutants such as sewer venting, cooking byproducts and tobacco smoke independently of their heating and cooling delivery functions, but provide no protection against CBR agents. Air intake, distribution, and venting are critical factors in controlling CBR agents.

Modern HVAC systems provide heating, ventilating, and air conditioning service, and may also include humidity control mechanisms. These all-in-one systems provide both climate control and ventilation. However, some building mechanical systems, such as hydronic heating and cooling, are required to have separate air handling units to provide ventilation (ANSI/ASHRAE 62.1-2004). Historic buildings still using systems that predate inclusive HVAC systems fall into this category. The separation of climate control equipment from ventilation is considered to be an asset in terms of CBR protective design. Ventilation systems that share ductwork with HVAC climate control equipment are more problematic from a UFC compliance standpoint, especially for mailroom ventilation.

UFC Standard 17 requires that dedicated air ventilation systems be provided for mailrooms to ensure that airborne CBR agents introduced in a mailroom do not spread throughout the rest of the building. This standard responds to the 2001 anthrax attacks in which mail was the mode of delivery. The method enables adversaries to launch an attack without entering the building, and lightly handled packages with no or deceptive return addresses are difficult to trace back to the originator.

If implementing UFC Standard 17 in historic buildings proves cumbersome, relocation of mailroom functions to a non-historic building should be considered as a viable alternative.

Mailrooms — Move Mailroom Offsite. Centralizing mailroom functions in modern, offsite facilities allows letters and packages to be checked, tracked, and consolidated in a highly efficient and protected environment. Remote mail handling facilities can be outfitted and operated with bomb-safe rooms, radiation-detecting devices, and bomb-sniffing dogs. This approach is currently in successful use by many large U.S. companies (Babcock 2003). Relocating mailrooms from historic to non-historic buildings avoids AT/HP conflicts related to the construction of separate, dedicated mailroom ventilation systems. If the vacated space has mailroom-related features that are historically significant, those features should be preserved in place to the greatest extent feasible during reuse.

Other heating and cooling systems (B-4.2.1)

Building-wide steam, hot water, chilled water, and refrigerant systems may serve mailrooms along with other areas of a building. However, any mailroom airflow system must be kept separate from air handling units located throughout the rest of the building. This requirement may be especially difficult to satisfy for HVAC systems in which central air systems provide temperature control and airflow through shared ductwork.

Dedicated exhaust systems (B-4.2.2)

As discussed earlier, the circulation of indoor airborne contaminants can be controlled by creating pressure differences between interior spaces within a building. For example, to limit the movement of motor vehicle exhaust from an attached garage into occupied portions of a building, garage exhaust fans are used to keep the garage at a lower pressure than the rest of the building (Persily 2004). The indoor air moves from higher- to lower-pressure areas, thus ensuring that vehicle exhaust will not infiltrate the building (Figure 53).

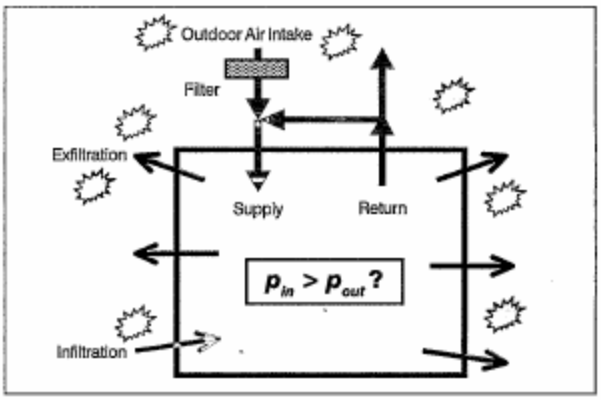

Figure 53. Pressurization/filtration protection (Persily 2004).

Mailrooms must be outfitted with dedicated exhaust systems in order to maintain the required negative air pressure compared with the rest of the building. This is a containment strategy that prevents contaminated air in the mailroom from infiltrating other parts of the building. Containment is highly effective when only specific vulnerable spaces in a building need protection. Negative-pressure airflow into the mailroom will not completely eliminate the potential spread of airborne contamination by personnel leaving the mailroom, but it can limit the migration of contaminants through wall openings and doorways.

AT/HP conflicts may arise when new exhaust equipment is introduced into mailrooms where there was previously none. Mailrooms located in secondary spaces will generally have fewer AT/HP conflicts than those situated in primary spaces. Regardless of mailroom location, attention should be given to the path of exhaust because the installation of exhaust fans and their apertures through the building envelope can negatively impact historically significant building elevations.

Mailroom Exhaust Systems — Exhaust Mailroom Through Roof. If possible, exhaust mailroom air via the roof. Locate roof vents or hoods for complete concealment from view, for integration with the lines of the building (e.g., low-profile ridge vents), or on secondary building elevations. Choose vent styles that work best with the historic building aesthetics. Some building configurations allow for independent ceiling-mounted exhaust fans that discharge indoor air directly through the roof.

Mailroom Exhaust Systems — Exhaust Mailroom Through Secondary Exterior Walls. If mailroom venting through the roof is not possible, exhaust air through exterior wall vents or hoods on secondary building elevations. As for roof vents, choose unobtrusive hardware styles that work best with the historic architecture (Figure 54).

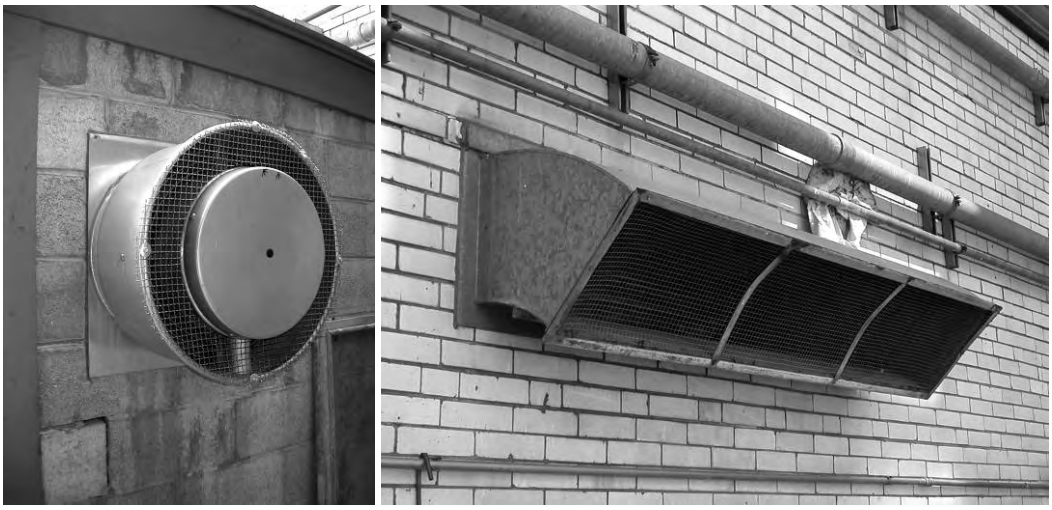

Figure 54. Exhaust vents come in various configurations and should be selected to blend with the historic architecture (ERDC-CERL 2005).

Outside intakes and exhausts (B-4.2.3)

All outside air intakes and exhaust mechanisms on mailroom ventilation systems must be equipped with low-leakage isolation dampers that can be closed to isolate the mailroom. This is a standby feature that must be activated when an attack is imminent or underway. Because dampers are located inside ventilation components, this modification creates no AT/HP conflicts.

Isolation controls (B-4.2.4)

The UFC requires that separate switches or methods of control be provided to isolate mailroom airflow in the event of suspected or actual CBR releases. These switches should be located so building occupants can easily access them on short notice.

AT/HP conflicts associated with mailroom isolation controls can be minimized with careful placement of apparatus away from historically significant wall materials, features, and finishes.

Mailroom Isolation Controls — Provide Mechanical System Controls. Provide controls that isolate airflow to and from mailrooms. Switches should be located so they are readily accessible by building personnel. To avoid possible conflicts with the SOI rehabilitation standards, locate all E/M service boxes, panels, controls, and switches away from historically significant materials, features, and finishes to avoid visual incongruities or physical damage to historic fabric. If feasible and compliant with building codes, reuse existing electrical cutouts to achieve this goal. However, if cutting or drilling historic material such as marble or plaster cannot be avoided, determine appropriate repair techniques and locate qualified preservation professionals to conduct restoration work as necessary. Choose panel covers and switch plates in materials and colors that blend into the wall. Conceal electrical conduit, cables, and wiring for UFC-mandated service boxes, panels, controls, and switches in secondary spaces and wall cavities. Conduit that must remain in view should not be laid over historically significant moldings, cornices, and other significant architectural features. In some instances, conduit can be obscured by laying in gaps between or behind millwork. For large, blank walls that lack concealment opportunities, conduit should run in areas beyond the normal field of vision, following the lines of the building in places like the tops of baseboards, beams, and cornices. Visible conduit should be painted to blend with the architectural features.

While the UFC does not provide additional recommended measures specific to mailrooms, there are additional precautions that can increase the overall safety and security of mailroom operations.

Mailroom Security — Increase Mailroom Security. In response to the security environment after September 11, 2001, facility managers are restricting access by unauthorized personnel and changing their mail handling techniques. Also, the use of technology

can supplement UFC requirements to increase mail facility security. Imaging devices, metal detectors, and radiation sensors can be used to inspect incoming packages (Babcock 2003).

Emergency air distribution shutoff (UFC Standard 18, B-4.3)

UFC Standard 18 requires that emergency shutoff switches in the HVAC control system be provided for all new and existing inhabited buildings. The purpose of the switches is to allow for the immediate shutdown of air distribution (including exhaust systems) throughout a building if an attack is imminent or under way. Circuits are to be laid out so they will not shut down air handlers in portions of buildings where negative pressure is provided, such as mailrooms. Switches are to be located so any authorized user, including building occupants, can quickly and easily activate them on short notice. While it may not always be clear when the shutoff should be used, the standby capability will help to limit the distribution of airborne contaminants once they are introduced into a building (Persily 2004).

Like mailroom isolation controls, AT/HP conflicts associated with emergency shutoff switches can be minimized with careful layout of service boxes, panels, controls, and switches to minimize the impact on historic interiors.

Air Distribution Shutoff — Provide Mechanical System Controls. Provide switches that allow for emergency air distribution shutoff capability. For potential AT/HP conflicts, refer to text under "Isolation controls (B-4.2.4)" on page 144.

Blast-related provisions for electrical and mechanical design

The threat focus for UFC Standards 19 – 21 is blast attack. The 1995 bombing of the Murrah Building in Oklahoma City was the most destructive and widely known stationary bombing attack on U.S. soil to date, but UFC 4-010-01 standards address much smaller bomb threats. The blast-related E/M provisions of the UFC are intended to decrease the likelihood of damage to critical E/M infrastructure that could cause mass casualties in a blast.

Utility distribution and installation (UFC Standard 19, B-4.4)

UFC Standard 19 addresses the protection of utility infrastructure (e.g., transformers, switchgear, voltage regulators, and water supplies) from damage during an explosion. Some utility systems are critical to occupant life-safety, while others allow for safe evacuation from the building during a threat or attack. Furthermore, the protection of some utility networks is crucial if their destruction would cause damage disproportionate to other building damage resulting from an explosion. Because utilities tend to function as distributed systems, damage to one portion of the network may impact the entire system, building, or complex. Standard 19 is intended to limit infrastructure damage and also requires that utility systems be designed with a level of redundancy to support continuing building operations when an attacker successfully interrupts primary utility sources.

While electrical service is the primary concern under Standard 19, other utility networks are also addressed. For example, comprehensive fire detection and suppression systems (i.e., smoke detectors, fire alarms, sprinklers, smoke purge fans and dampers) function with full effectiveness only when electrical utilities, water distribution systems, and mechanical equipment all are functioning properly.

Utility routing (B-4.4.1)

Critical utilities are those vital to normal building operations. Fragile utilities are those likely to be damaged by a blast. All new inhabited buildings must be designed so critical and fragile utilities are routed away from exterior walls or any walls shared with mailrooms. Exterior walls and mailrooms are generally considered the most vulnerable locations to vehicular or placed bomb attacks. This provision protects susceptible utilities (e.g., electricity, natural gas, fire suppression systems) by keeping them away from high risk areas. This requirement is recommended for existing buildings, but it is not mandatory.

Historic preservation practice generally seeks to conceal new conduit and other utility routing infrastructure in secondary spaces, wall cavities, or chases. Because exterior walls often lack adequate cavity space, the UFC requirement to move utility routing away from exterior walls can support historic preservation concealment strategies. The placement of new utility routing away from exterior walls also helps to minimize intrusions to the historic building envelope, which is almost always a character-defining

feature of historic military buildings. Nonetheless, AT/HP conflicts can arise near mailrooms.

Utility Routing — Relocate Critical and Fragile Utilities. Care must be taken when relocating utility infrastructure away from vulnerable exterior walls. To avoid possible AT/HP conflicts, relocation should be to interior wall cavities or secondary building spaces that lack historically significant materials, features, and finishes. Where conduit must be relocated to a historic interior, avoid mounting over historically significant moldings, cornices, and other significant architectural features. Instead conceal conduit in existing millwork or details, or outside the normal field of vision.

Utility Routing — Enclose Utility Lines in Blast-Resistant Casings. This resolution is useful in situations where it would be difficult to relocate extensive, existing utility lines away from exterior or vulnerable walls. Choose conduit casings in materials and colors that blend into the historic architecture.

Redundant utilities (B-4.4.2) and emergency backup systems (B-4.4.3)

Redundant utilities duplicate primary utilities and serve as emergency backup. If redundant utilities and emergency backup systems are required to meet other criteria, they are to be located away from the components or systems that they duplicate. Redundant utilities, such as electrical wiring, must not be run through the same cavities or channels as the primary service. This approach reduces the probability that both sets of utilities will be damaged by any single event. The same approach should be applied to emergency backup equipment such as generators and data file backup systems.

Since duplicates and backups are not to be collocated with their redundant counterparts, each primary and secondary system will require its own remote housing. This may increase the area of potential impact in terms of AT/HP conflicts as designers may be required to conceal twice the amount of equipment and conduit. Because the specific AT/HP resolutions will

depend on the systems being duplicated, cross-reference the other resolutions presented in this chapter for applicable guidance.

Equipment bracing (UFC Standard 20, B-4.5)

All overhead utilities and other fixtures should be mounted to minimize the likelihood that they will fall and injure building occupants during an explosion. The intent of UFC Standard 20 is to limit human casualty, rather than infrastructure damage. It applies to any piece of equipment weighing 14 kilograms (31 pounds) or more. All equipment mountings are to be designed to resist forces equal to half the equipment weight in any direction and 1½ times the equipment weight in the downward direction.

Overhead utilities such as air conditioning units are often hung from the ceiling by tension rods (Figure 55). These rods support equipment vertical gravity loads by attaching the rods to overhead floor slabs or framing. As tension rods are not usually designed for lateral loads, diagonal or horizontal bracing will typically be required to satisfy UFC Standard 20. Based on structural analysis, existing structural supports may require reinforcement to carry the additional gravity loads. Additionally, this standard does not preclude the need to design equipment mountings for more stringent criteria such as seismic design in earthquake prone regions.

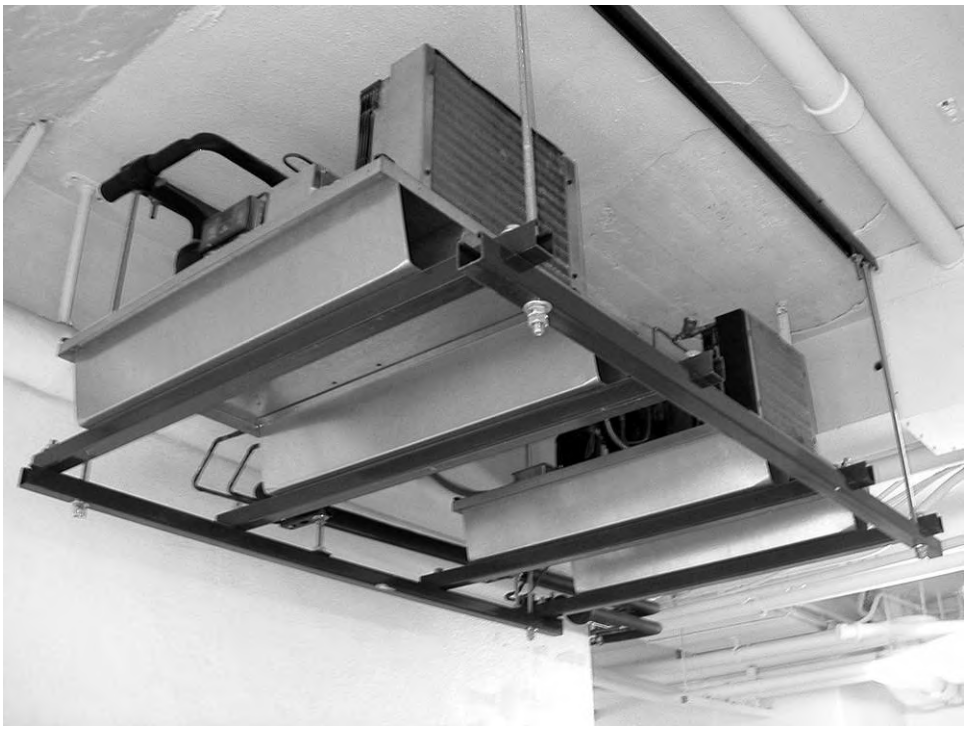

Figure 55. This ceiling mounted equipment rack will likely need horizontal or diagonal bracing to comply with the UFC (ERDC-CERL 2005).

If structural analysis shows that existing overhead connections need additional bracing, reinforcement, or more secure mounts to comply with this standard, precautions must be taken to minimize disturbance of the historic fabric and overall appearance of historically significant building interiors. AT/HP conflicts can be minimized by relocating existing fixtures and overhead utilities or placing new equipment in secondary areas that lack historic significance or integrity.

Equipment Bracing — Brace or Reinforce Existing Overhead E/M Equipment. Brace or reinforce existing overhead E/M equipment to adhere to the design loads as specified above. This can be done in a number of ways depending on the location of existing structural members to which bracing or reinforcement will be attached. The necessary robustness of any such bracing or reinforcing members depends on the weight of equipment being braced. Therefore, choose bracing or reinforcing that adequately supports the equipment and blends into the surrounding architecture. If the bracing or reinforcing necessary to

comply with UFC Standard 20 detracts from the historic integrity of a space, it may be appropriate to conceal utilities and fixtures in purpose-built enclosures and cabinetry. Design enclosures in materials, textures, and colors to blend with the historic architecture.

Equipment Bracing — Brace Existing Overhead E/M Equipment with High-strength Netting. This resolution involves securing overhead E/M components in place with reasonably transparent high-strength nets. The nets must be properly anchored to address specified loads and detailed to prevent tearing. This strategy may be particularly suitable for historically significant E/M components whose bracing or relocation would constitute a negative HP impact.

Equipment Bracing — Relocate Overhead E/M Equipment. Some bracing and reinforcing arrangements may be impacted by space limitations in the vicinity of overhead E/M equipment or other constraints. If such limitations necessitate relocation of overhead utilities and fixtures, it is imperative that relocated equipment be located in nonhistoric areas or integrated with any historically significant materials, features, and finishes. If there is damage to historic fabric at the vacated or new location, a well executed repair by a preservation professional is the best course of action.

Equipment Bracing — Relocate Overhead E/M Equipment to Floor-Based Mount Structures. If overhead bracing is cumbersome or causes AT/HP conflicts, an alternative is to detach overhead utilities and fix them to floor-based mount structures or pedestals. These pedestals may be constructed at a height appropriate for the equipment they support. If not properly implemented, this option may take up con-

siderable floor space and greatly alter the aesthetics of significant building interiors.

It should be noted that UFC Standard 20 on equipment bracing of E/M components is virtually identical to UFC Standard 15 on bracing overhead mounted architectural features. Both protect building occupants from falling or flying building components in an explosion.

Under building access (UFC Standard 21, B-4.6)

UFC Standard 21 stipulates limited access to the underside of buildings. This is to deter aggressors from gaining any type of under-building access that would allow them to tamper with building equipment or detonate a bomb. While this provision is related to access control, its primary purpose is to limit casualties and damage to infrastructure from an under-building detonation.

Crawl spaces, utility tunnels, and other means of under-building access must be controlled to limit opportunities for placed explosives. Since hand delivered devices are physically smaller and involve less explosive material than their stationary vehicle counterparts, under-building blast detonations are likely to be comparatively small in nature. This does not diminish the fact that carefully placed handheld devices can cause a disproportionate amount of damage to critical utilities.

The most common form of under-building access is the crawl space. Crawl spaces exist in various forms. Some occupy the entire footprint of a building, while others are located under only portions of a building. The least sophisticated is open at its entire perimeter, thus leaving structural supports and under-building utilities exposed and in plain view. Concealed crawl spaces have enclosures that block the space from view. These are typically added to the building after-the-fact and may not be secure enough to deter access. Integrated crawl spaces are incorporated into the building envelop as an extension of its exterior walls. These crawl spaces are typically vented (Figure 56) and have periodic access openings along their perimeter. Regardless of design, each crawl space access point must be secured. Access to underground utility tunnels must be limited as well. This includes those accessible from inside or outside a building. Some utility tunnels link up with other buildings on a property, thus providing aggressors with under-building access to multiple buildings. Regardless of utility tunnel configuration and location, each access point must be se-

cured at each building. In addition to under-building access control by physical means (i.e., enclosures, doors, and locks), surveillance technologies may be helpful in monitoring critical entry locations.

Figure 56. Crawl space vent openings must be small enough to prevent placement of hand-carried explosive devices beneath buildings (ERDC-CERL 2002).

Potential AT/HP conflicts associated with implementing UFC Standard 21 are likely to focus on the manner in which under-building areas are secured or enclosed. An additional issue may be the replacement of historic doors with metal security doors. While doors in secondary building areas (i.e., utility spaces) are less likely to be significant, if they are, lockable metal security doors can be manufactured in various profiles to match their historic counterparts.

Under-Building Access — Enclose Open Crawl Space. Open-air crawl spaces can be secured with a perimeter enclosure. The new enclosure should be designed to be compatible with yet discernible from the existing historic architecture per SOI Standard 9. Careful color, texture, and material choices can limit AT/HP conflicts.

Under-Building Access — Secure Crawl Space Openings. Secure vents and access openings from an aggressor by installing tamper-resistant vent covers and lockable access panels. Padlocks and electronic locks can be used to secure access panels. As with the previous resolution, careful choice of covers and panels can limit AT/HP conflicts.

Under-Building Access — Secure Utility Tunnel Access. Install metal security doors and locks to interior and exterior utility tunnel access points so that only authorized personnel may gain access. The addition of new metal security doors will generally have more impact on historic integrity than the installation of locks on existing doors.

Under-Building Access — Monitor Under-Building Points of Entry. Augment physical security measures at under-building access locations with sensor and surveillance equipment placed to monitor activities at or near points of entry. Conceal equipment under building eaves or within site features to minimize disturbance to historic property integrity while maintaining effective surveillance line-of-sight corridors.

It should be noted that UFC Standard 21 on under-building access has a counterpart requirement in UFC Standard 14 on roof access. Both limit building access to minimize tampering by aggressors.

Summary and Recommendations

Summary

Terrorist attacks in the continental United States have been of the symbolic and expressive types, meaning that they are intended to send a "message" to the public beyond (or exclusive of) any tactical advantage that may be gained. Historic military properties may be preferred by terrorists as high-visibility, content-rich potential targets for a symbolic or expressive terrorist attack. Such properties are subject to the requirements of UFC 4-010-01, but AT undertakings must be planned and executed in accordance with requirements of the National Historic Preservation Act and the Secretary of the Interior's Standards for Rehabilitation.

AT undertakings on historic military properties may create situations in which the requirements of UFC 4-010-01 and Federal historic preservation mandates conflict. Such conflicts may cause delays or excessive costs unless they are addressed by a project team that includes both protective facility design and cultural resources expertise, as well as representatives of the installation master planning function, Department of Public Works, and other stakeholders. When the cultural resources and protective design team members understand the requirements and constraints of each other's technical domain, an effective and cost-efficient collaboration may be undertaken to meet the demands of dual AT/HP compliance.

Recommendations

There is currently little technical information on how historic and aging properties perform in the blast environments incorporated into the UFC 4-010-01 baseline threats. Research and testing could yield critical data for use in effective, affordable protective rehabilitation measures for historic conventional construction. Projects likely to produce important results include the following:

- Conduct blast analyses with modeling and simulation software to study performance of historic building materials, components, and assemblies (e.g., 3- or 4-wythe brick masonry walls and thick, unreinforced limestone) that are unlikely to be available for affordable live blast testing.

- Conduct blast testing to study performance of aging building materials, components, and assemblies.
- Support testing of emerging materials and technologies to provide DoD with manufacturer-independent performance data on blast performance and interaction with aging conventional building materials.

Development of management guidance in the following areas may also help to resolve AT/HP conflicts:

- Establish procedures to minimize AT/HP undertakings. Management procedures should be developed that factor in the operational or human side of antiterrorism. It takes vigilant people to control access, identify oddities, enforce parking rules, conduct vehicle searches, etc. These activities can sometimes replace the need for engineered AT solutions.
- Establish policies and procedures for facility document control. These must address both hardcopy and web-accessible document/data archives including installation maps, architectural/engineering drawings, architectural/engineering specifications, facility functional diagrams, other facility technical information, and security procedures and protocols.
- Establish guidance for AT/HP management within GIS. Many military installations are implementing their Force Protection Plans in GIS that assess risk, monitor levels of protection and force protection conditions (FPCON), and include checklists detailing responses designed to systematically implement protective measures required at each FPCON level. Guidance for AT/HP purposes could address the use of GIS to optimize reuse of facilities to expedite AT compliance and minimize HP impacts. Historic property and antiterrorism datasets could be refined for use in facility reutilization analyses. Data reliability and system interoperability are important aspects of these systems. Also, when key data layers are combined geospatially, they create sensitive information that must be restricted. For this reason, it is imperative that such systems have appropriate security protocols to protect critical data.
- Establish cost metrics for UFC-mandated renovation projects. These should address UFC-driven undertakings that exceed renovation/replacement thresholds.* They should also allow for accounting

* On average, AT upgrades to windows, doors, and wall systems add 1-3% to new building costs where minimum standoff is met; structural hardening adds an average of 25-50% to rehabilitation costs for unreinforced construction where minimum prescribed standoff is not available.

separately for AT costs versus heritage asset costs. When accurately tracked, HP costs will be seen to be an incremental addition to the scheduled AT expenditures. Misleading claims about the cost of NHPA compliance should not be accepted as a reason to “work around” the stewardship requirement.

References

Introduction

36 CFR 800: PART 800, *Protection of Historic and Cultural Properties*.

Bennet, Bruce W., Christopher P. Twomey, and Gregory F. Treverton, *What Are Asymmetric Strategies?*, DB-246-OSD (RAND, Santa Monica, CA, 1999).

Fastabend, David A., and Robert H. Simpson, "The Imperative for a Culture of Innovation in the U.S. Army: Adapt or Die," *Army Magazine*, vol 54, no. 2 (Association of the U.S. Army, February 2004), p 15 – 16.

National Historic Preservation Act of 1966 (as amended), 16 USC 470 et seq, Sec. 1.

National Register Bulletin 15, "How to Apply the National Register Criteria for Evaluation" (NPS, 1990, revised 1991).

NHPA Section 106 Review, fact sheet (General Services Administration, July 1997). Accessed online 31 March 2004 at http://hydra.gsa.gov/pbs/pt/call-in/factshet/0797a/0797fact.htm.

Chapter 1

Executive Order 12977, *Interagency Security Committee* (The White House, 19 October 1995).

MIL-HDBK-1013/10, *Design Guidelines for Security Fencing, Gates, Barriers, and Guard Facilities* (DoD, 14 May 1993).

Military Handbook (MIL-HDBK) 1013/1A, *Design Guidelines for Physical Security of Facilities* (DoD, 15 December 1993).

Secretary of the Interior (SOI), *Standards for Rehabilitation* (NPS, 1995).

U.S. Customs and Border Protection (CBP), *CBP Securing Our Borders Inspection and Surveillance Technologies*, fact sheet (DHS, 05 May 2005).

Unified Facilities Criteria (UFC) 4-010-01, *DoD Minimum Antiterrorism Standards for Buildings* (DoD, 08 October 2003).

Unified Facilities Guide Specification (UFGS) 02840, *Active Vehicle Barriers* (USACE, August 2003).

Universal Safety Response, Inc., Ground Retractable Automobile Barrier (GRAB), brochure (Universal Safety Response, Inc., Franklin, TN, 2005).

Chapter 2

ASCE 7-02, *Minimum Design Loads for Buildings and Other Structures*, ISBN 0784406243 (American Society of Civil Engineers, 1 December 2002).

Blast-Resistance Benefits of Seismic Design – Phase 1 Study: Performance Analysis of Concrete Construction Based on the Murrah Federal Building, FEMA 439A (Federal Emergency Management Agency, U.S. Department of Homeland Security, 2006).

Brown, Jay P, and Arup Maji, "Blast-Proofing of Unreinforced Masonry (URM) Walls with GFRP," 15th ASCE Engineering Mechanics Conference. June 2-5, 2002.

Collins, Barney J., and J. William Jordan, "Earthquake Damage Repair and Strengthening of Christ Church Cathedral, Newcastle NSW," presented at Structural Faults & Repair 97: The Seventh International Conference on Structural Faults and Repair, Edinburgh, Scotland, 8 – 10 July 1997.

Coltharp, David, and Robert L. Hall, "Blast Retrofit Research and Development: Protection for Walls and Windows," *Amptiac Quarterly*, vol 6, no. 4, p 31-37 (2002).

Crawford, John E., "Retrofit Methods to Mitigate Progressive Collapse," presented at the National Institute of Standards and Technology (July 2002).

Crawford, John E., L. Javier Malvar, and Kenneth B. Morrill, "Reinforced Concrete Column Retrofit Methods for Seismic and Blast Protection," Proceedings of the Society of American Military Engineers Symposium on Comprehensive Force Protection, Charleston, SC, 1-2 November 2001.

Elron, Yoram, Yermiahu Negri, and James F. MacKenzie, "The Engineering Concept of 'Soft-Hardening,'" *Assessment & Implementation in Protective Construction* (1999).

Engineering Technical Letter (ETL) 02-4, *Airblast Protection Polymer Retrofit of Unreinforced Concrete Masonry Walls* (Headquarters, Air Force Civil Engineering Support Agency [HQAFCESA/CES], 12 Jun 2002).

Engineering Technical Letter (ETL) 1110-3-494, *Airblast Protection Retrofit for Unreinforced Concrete Masonry Walls* (Headquarters, U.S. Army Corps of Engineers [HQUSACE], Washington DC, 14 July 1999.

Ettouney, Mohammed, Robert Smilowitz, and Tod Rittenhouse, "Blast Resistant Design of Commercial Buildings," *Practice Periodical on Structural Design and Construction*, ASCE, February 1996.

Gilstrap, Jeremy M., and Charles W. Dolan, "Out-of-Plane Bending of FRP-Reinforced Masonry Walls," *Composites Science and Technology* 58 (1998) 1277-1284.

Gould, Nathan C., "Quantifying the Risk for Progressive Collapse in New and Existing Buildings" (International Risk Management Institute), March 2003. http://www.irmi.com/Expert/Articles/2003/Gould03.aspx

Hamburger, Ronald, and Andrew Whittaker, "Design of Steel Structures for Blast-Related Progressive Collapse Resistance," *Modern Steel Construction*, vol 44, no. 3, p 45-51 (March 2004).

Houghton, David L., and Jesse E. Karns, "Effective Mitigation of Progressive Collapse in Steel Frame Buildings Using Ductile High-Capacity Girder-to-Column Moment Connections Exhibiting Discrete Structural Continuity Across a Failed Member," Proceedings of the Society of American Military Engineers (SAME) National Symposium on Comprehensive Force Protection, Charleston, SC, November 1 – 2, 2001.

Krauthammer, Theodor, "Blast-Resistant Structural Concrete and Steel Connections," *International Journal of Impact Engineering*, vol. 22, January 1999.

Morley Builders, "Technology in Transition: Coping with Seismic Forces in New and Existing Buildings," *Building Blocks* (Morley Builders, Santa Monica, CA, Winter 1997/1998).

Morrill, Kenneth B., L. Javier Malvar, John E. Crawford, and John M. Ferritto, "Blast Resistant Design and Retrofit of Reinforced Concrete Columns and Walls" (2004).

Sanicki, Jennifer L., "Restoring the Royal Heritage," *Stone World* (BNP Media, Inc., September 1998).

Shahrooz, Bahram M., Jeremy T. Deason, and Gokhan Tunc, "Outrigger Beam-Wall Connections," *Journal of Structural Engineering*, ASCE, February 2004.

Shi Zhang, Lin Ye, and Yiu-Wing Mai, "A Study on Polymer Composite Strengthening Systems for Concrete Columns," *Applied Composite Materials*, 7, 2000, 125-138.

Smilowitz, Robert, "Designing Buildings to Resist Explosive Threats," *Whole Building Design Guide* (National Institute of Building Sciences, 2004a), http://www.wbdg.org/design/res-print.php?rp=37, accessed 18 January 2005.

Smilowitz, Robert, "Retrofitting Existing Buildings to Resist Explosive Threats," *Whole Building Design Guide* (National Institute of Building Sciences, 2004b), http://www.wbdg.org/design/resource.php?cn=3.5.3&cx=0&rp=36, accessed 18 January 2005.

Smith, Peter D., and Tim A. Rose, "Blast Loading and Building Robustness," *Prog. Struct. Engng Mater.*, 4, p 213-223, May 2002.

Sunshine, Douglas A., Mark W. Swanson, Robert D. Swedock, "TSWG Blast Mitigation Program" (Technical Support Working Group, not dated), http://er1.org/docs/facility%20protection/08%20-%20new%20technologies%20for%20design%20and%20evaluation/28%20TSWG%20blast%20mitigation%20program.pdf, accessed 21 January 2005.

Ward, Steven P., "Retrofitting Existing Masonry Buildings to Resist Explosions," Special Issue on Blast Mitigation and Design against Terrorism, *Journal of Performance of Constructed Facilities*, p.95-99 (May 2004).

Chapter 3

ASTM Standard E1300-04e1, *Standard Practice for Determining Load Resistance of Glass in Buildings*.

ASTM Standard F2248-03, *Standard Practice for Specifying an Equivalent 3-Second Duration Design Loading for Blast Resistant Glazing Fabricated with Laminated Glass*.

Bogosian, David, and Hrire Der Avanessian, "To Film or Not To Film: Effects of Anti-Shatter Film on Blunt Trauma Lethality from Tempered Glass, 17th International Symposium on the Military Aspects of Blast and Shock," Las Vegas, NV, June 2002.

Crawford, John E., Daniele Pelessone, David D. Bogosian, and Anthony A. Ronca, "Retrofits for Existing Windows to Protect Occupants from Injurious Debris Due to a Bombing," Presented at 71st Shock & Vibration Symposium, Arlington, Virginia, November 2000.

Department of the Navy, web archive, http://www.hnn.navy.mil/archives/010914/images_091401/pentagon_damage.jpg.

Force Protection Equipment Demonstration IV, Homeland Security: Protecting America's Future [compact disc, no accession number], Office of the Under Secretary of Defense for Acquisition and Technology and The Joint Staff (United States Marine Corps Base Quantico, Virginia: May 2003).

Hinman, Eve, "Blast Safety of the Building Envelope," *Whole Building Design Guide* (National Institute of Building Sciences, 2005), http://www.wbdg.org/design/env_blast.php?print=1, accessed 7 April 2006.

International Window Film Association (IWFA), Safety/Security Window Film. Martinsville, VA. 1999.

Lin, Lorraine H., Eve Hinman, Hollice F. Stone, and Allison M. Roberts, "Survey of Window Retrofit Solutions for Blast Mitigation," Special Issue on Blast Mitigation and Design against Terrorism, *Journal of Performance of Constructed Facilities*, p 86-94 (May 2004).

Nadel, Barbara A., "Securing Past and Protecting the Future Is Landmark Task: Architects, Engineers and Contractors Need Sensitivity," Special Report by ENR and Architectural Record, *Engineering News-Record* (1 December 2003).

National Historic Preservation Act of 1966 (as amended), 16 USC 470 et seq, Sec. 1.

Norville, Scott H., and Edward J. Conrath, "Considerations for Blast-Resistant Glazing Design," *Journal of Architectural Engineering*, p 80-86 (September 2001).

Norville, Scott H., Natalie Harville, Edward J. Conrath, Sheryll Shariat, and Sue Mallonee. "Glass-Related Injuries in Oklahoma City Bombing," *Journal of Performance of Constructed Facilities*, p 50-56 (May 1999).

Oldcastle-Arpal web site, http://www.oldcastlearpal.com/ (Oldcastle-Arpal LLC, Arlington, VA), accessed 25 August 2006).

Secretary of the Interior's (SOI) Standards for Rehabilitation, 36 CFR Part 67.

Smith, Joseph L., "Anti-Terrorism: Criteria, Tools & Technology,) *Design-Build Dateline*, February 19, 2003.

Smith, Joseph, and Nancy Renfroe, "Glazing Hazard Mitigation," *Whole Building Design Guide* (National Institute of Building Sciences, 2005), http://www.wbdg.org/design/glazingmitigation.php, accessed 24 August 2005.

Stone, Hollice, *Forcible Entry Demonstrations: Air-blast Resistant Window Systems* (GSA, 10 July 2003).

Sunshine, Douglas., Ali Amini, and Mark Swanson, "Overview of Simplified Methods and Research for Blast Analysis," *Journal of Structural Engineering* (2004).

U.S. Army Corps of Engineers, Protective Design Center. Window Design and Analysis Software (WinDAS), version 2.5, Omaha, Nebraska, August 2001.

United Facilities Criteria (UFC) 4-010-01, *DoD Minimum Antiterrorism Criteria for Buildings*, 8 October 2003.

Chapter 4

Absorption Cooling, Building Technologies Program (U.S. Department of Energy [DOE], 2004); http://www.eere.energy.gov/buildings/info/components/hvac/cooling/absorption.html

Arnold, David, "Air Conditioning in Office Buildings after World War II," *ASHRAE Journal*, p 33 (July 1999).

Babcock, Regina Raiford, "Bioterrorism and the Built Environment," *Buildings*, vol 97, no. 11, pp 44-6 (November 2003).

Blewett, William K., "Chemical and Biological Threats: The Nature and Risk," *Heating/Piping/Air Conditioning Engineering*, vol 76, no. 9, pp 57-9, 61 (September 2004).

Corley, Gene W., Paul F. Mlakar Sr., Mete A. Sozen, and Charles H. Thornton, "The Oklahoma City Bombing: Summary and Recommendations for Multihazard Mitigation," *Journal of Performance of Constructed Facilities*, ASCE, vol 12, no. 3 (August 1998).

Hayden, A.C.S (Skip), "Choosing a Heating System that Saves Energy," *Home Energy Magazine Online* (March/April 1996).

"How Does It Work? Absorption Chillers," *Energy Matters Newsletter* (DOE, Fall 2003).

Janus, Michael C., and Robert Rudolph, "Protecting People in Buildings," *USA Today*, vol 133, pp 10-12, July 2004.

Miller, James D., "Defense Filtration," *ASHRAE Journal*, vol 44, no. 12, pp 18-19, 22, 24, 26, 28 (December 2002).

Otterbein, Roy, *Home Energy Magazine Online* (May/June 1996).

Park, Sharon C., *Preservation Briefs 24: Heating, Ventilating, and Cooling Historic Buildings* (U.S. Department of the Interior, 1991).

Persily, Andy, "Building Ventilation and Pressurization as a Security Tool," *ASHRAE Journal*, vol 46, no. 9, pp 18-20, 22-4, 26 (September 2004).

Reference Manual to Mitigate Terrorist Attacks Against Buildings, Chapter 5, Chemical, Biological, and Radiological Measures (FEMA, December 2003).

Springer, David, "Don't Force Air, Go with the Flow," *Home Energy Magazine Online* (November/December 1993).

UFC 4-011-01, *DoD Security Engineering Planning Manual* [draft] (DOD, 21 May 2004).

United Facilities Criteria [UFC] 4-021-01, *Design and O&M: Mass Notification Systems* (Department of Defense [DOD], 18 December 2002).

Ventilation for Acceptable Indoor Air Quality, ANSI/ASHRAE 62.1-2004, ASHRAE (31 December 2004).

Whole House Fan, Technology Fact Sheet DOE/GO-10099-745 (DOE, March 1999).

REPORT DOCUMENTATION PAGE

Form Approved
OMB No. 0704-0188

Public reporting burden for this collection of information is estimated to average 1 hour per response, including the time for reviewing instructions, searching existing data sources, gathering and maintaining the data needed, and completing and reviewing this collection of information. Send comments regarding this burden estimate or any other aspect of this collection of information, including suggestions for reducing this burden to Department of Defense, Washington Headquarters Services, Directorate for Information Operations and Reports (0704-0188), 1215 Jefferson Davis Highway, Suite 1204, Arlington, VA 22202-4302. Respondents should be aware that notwithstanding any other provision of law, no person shall be subject to any penalty for failing to comply with a collection of information if it does not display a currently valid OMB control number. PLEASE DO NOT RETURN YOUR FORM TO THE ABOVE ADDRESS.

1. REPORT DATE (DD-MM-YYYY)
09-2006

2. REPORT TYPE
Final

3. DATES COVERED (From - To)

4. TITLE AND SUBTITLE
Antiterrorism Measures for Historic Properties

5a. CONTRACT NUMBER

5b. GRANT NUMBER

5c. PROGRAM ELEMENT NUMBER

6. AUTHOR(S)
Julie L. Webster, Patrick E. Reicher, and Gordon L. Cohen

5d. PROJECT NUMBER
97/0100/701/A/W31RYO31164703

5e. TASK NUMBER

5f. WORK UNIT NUMBER

7. PERFORMING ORGANIZATION NAME(S) AND ADDRESS(ES)
U.S. Army Construction Engineering Research Laboratory (CERL)
P.O. Box 9005
Champaign, IL 61826-9005

8. PERFORMING ORGANIZATION REPORT NUMBER
ERDC/CERL TR-06-23

9. SPONSORING / MONITORING AGENCY NAME(S) AND ADDRESS(ES)
Office of the Deputy Under Secretary of
Defense for Environmental Security
Legacy Resource Management Program

10. SPONSOR/MONITOR'S ACRONYM(S)
ODUSD (ES) EQ-LP

11. SPONSOR/MONITOR'S REPORT NUMBER(S)

12. DISTRIBUTION / AVAILABILITY STATEMENT
Approved for public release; distribution is unlimited.

13. SUPPLEMENTARY NOTES

14. ABSTRACT

Unified Facilities Criteria (UFC) 4-010-01 establish the minimum antiterrorism (AT) standards for Department of Defense buildings. Those standards apply not only to new buildings, but also to existing buildings, including properties defined as historic under the National Historic Preservation Act (NHPA). Because achieving the specified level of protection may involve significant modifications of an existing building, compliance with UFC 4-010-01 may create its own set of preservation-related compliance challenges. The objectives of this study were to (1) identify common circumstances in which UFC 4-010-01 undertakings will conflict with the requirements of the NHPA and (2) develop specific guide-lines that will help installation command, AT, cultural resources, and facilities personnel to rapidly resolve those conflicts in a way that satisfies both sets of requirements.

15. SUBJECT TERMS
National Historic Preservation Act (NHPA) historic buildings terrorism
antiterrorism protective design physical security

16. SECURITY CLASSIFICATION OF:			**17. LIMITATION OF ABSTRACT**	**18. NUMBER OF PAGES**	**19a. NAME OF RESPONSIBLE PERSON**
a. REPORT	**b. ABSTRACT**	**c. THIS PAGE**			**19b. TELEPHONE NUMBER (*include area code*)**
Unclassified	Unclassified	Unclassified		177	